Report of the Land-Based Freshwater Testing of the Siemens SiCURE™ Ballast Water Management System

March 15, 2010

Principal Investigator:

Allegra Cangelosi, NEMWI

Research Team:

Lisa Allinger, NRRI, UMD
Mary Balcer, PhD, LSRI, UWS
Nicole Mays, NEMWI
Tom Markee, LSRI, UWS
Christine Polkinghorne, LSRI, UWS
Kelsey Prihoda, LSRI, UWS
Euan Reavie, PhD, NRRI, UMD
Donald Reid, Consultant
Heidi Saillard, LSRI, UWS
Tyler Schwerdt, AMI Engineering
Heidi Schaefer, LSRI, UWS
Matthew TenEyck, LSRI, UWS

Report of the Land-Based Freshwater Testing by the Great Ships Initiative of the Siemens SiCURE™ Ballast Water Management System for Type Approval According to Regulation D-2 and the Relevant IMO Guidelines

March 15, 2010

Allegra Cangelosi, Principal Investigator
Great Ships Initiative
Northeast-Midwest Institute
50 F St. NW, Suite 950
Washington, DC 20001
Phone: 202-464-4007
Email: acangelo@nemw.org

Approved for Release:

Allegra Cangelosi
Digitally signed by Allegra Cangelosi
DN: cn=Allegra Cangelosi, o=Northeast-Midwest Institute, ou, email=acangelo@nemw.org, c=US
Date: 2010.04.05 15:09:16 -05'00'

_____

PI Signature

March 15, 2010.

EXECUTIVE SUMMARY

The Great Ships Initiative (GSI) provides independent no-cost performance verification testing services to developers of ballast treatment systems and processes at a purpose-built, land-based ballast treatment test facility located in the Duluth-Superior Harbor of Lake Superior. GSI test protocols are consistent with the requirements of the International Convention for the Control and Management of Ships Ballast Water and Sediments (International Maritime Organization, 2004). GSI procedures, methods materials and findings are publicly accessible on the GSI website (www.greatshipsinitiave.org).

In August through October 2009, the GSI conducted land-based tests on the SiCURE™ Ballast Water Management System in cooperation with German Bundesamt für Seeschifffahrt und Hydrographie (BSH), i.e., the German Federal Maritime and Hydrographic Agency. During the series of five consecutive valid trials, the SiCURE™ Ballast Water Management System was evaluated for its ability to: (a) successfully treat ballast water without interruption, (b) meet IMO D-2 discharge standards after a five-day holding time, and (c) discharge water after the five day retention period that is environmentally benign (i.e., no residual toxicity) pursuant to United States Environmental Protection Agency water quality criteria. It should be noted that because freshwater zooplankton are in general smaller than their salt and brackish water counterparts, the larger regulated size category (greater than 50 μm in minimum dimension) did not incorporate all live zooplankton that were present in the source water assemblage.

The Siemens SiCURE™ Ballast Water Management System functioned properly during the five consecutive trials, and was highly effective at reducing live organism densities in the fresh water ambient conditions of Duluth-Superior Harbor, as amended in these tests to achieve IMO-consistent challenge conditions. Live organisms in the regulated size classes were discharged in densities below the IMO D-2 standard. Microbial analyses showed system performance in keeping with IMO requirements for bacteria. Chemistry data generated across trials indicated the post-retention discharge to have well less than 0.1 mg/L total residual chlorine (TRC) under ambient conditions. Ambient water collected immediately after treatment and held in a cold environment had TRC and total residual oxidant (TRO) levels which slightly exceeded this level. However, in a real world application, the intake water would also be cold, and developers claim that the test system is designed to respond to this circumstance (reflected in oxidation-reduction potential, or ORP) with a reduction in chlorine generated and injected into the intake stream.

There were no acute toxic effects of treated discharge on any test species across assays and trials. Chronic toxicity effects in 100 % effluent were detected in one out of two trials for test species of zooplankton and phytoplankton. There were no chronic toxicity effects across organisms and trials in 50 % or lower effluent dilutions.

ACKNOWLEDGEMENTS

The authors would like to express our sincere gratitude to the Great Ships Initiative (GSI) Advisory Committee which provides invaluable input to the GSI Principal Investigator. We also wish to thank the ten United States and Canadian Great Lakes Ports which launched the GSI, and the Great Lakes Protection Fund which supported the initial scoping exercise. We sincerely thank the United States Department of Transportation, Maritime Administration, and National Oceanic and Atmospheric Administration for their substantial financial and in-kind support for the construction of the state-of-the-art GSI land-based testing facility. We thank the United States and Canadian St. Lawrence Seaway organizations, the Legislative Citizens Commission on Minnesota Resources, the University of Wisconsin-Superior, and the City of Superior for their active financial and/or in-kind support for GSI operations. We are grateful to the German Bundesamt für Seeschifffahrt und Hydrographie, BSH, (the German Federal Maritime and Hydrographic Agency), for visiting the GSI land-based facility and agreeing to accept data from the GSI in support of its type approval determinations, and the Maritime Environmental Resource Center for active collaboration as we pioneer ballast treatment evaluations in the United States.

CONTENTS

Executive Summary **3**

Acknowledgements **4**

Contents **5**

1.0. Introduction **7**

1.1. The Great Ships Initiative 7
1.2. The GSI Land-Based RDTE Test Facility 8
1.3. The Siemens SiCURE™ Ballast Water Management System 11
1.4. Treatment Performance Requirements in Regulation D-2 11
1.5. Relationship of GSI Testing to G8 and G9 Requirements in IMO Convention 12

2.0. Methods **14**

2.1. Experimental Goals and Design 14
2.1.1. Treatment System and Test Facility Calibration Trials 14
2.1.2. Valid Trial Series 15
2.1.3. Challenge Conditions 16
2.2. Water Chemistry Analysis 17
2.2.1. Total Residual Chlorine (TRC) and Total Residual Oxidant (TRO) Sample Collection 17
2.2.2. Total Residual Chlorine (TRC) Determination 18
2.2.3. Total Residual Oxidant (TRO) Determination 18
2.2.4. Selected Disinfection By-Products (DBPs) Determination 19
2.3. Water Quality Analysis 19
2.3.1. Analysis of Total Suspended Solids (TSS) 19
2.3.2. Analysis of Non-Purgeable Organic Carbon (NPOC) and Dissolved Organic Carbon (DOC), and Determination of Particulate Organic Carbon (POC) Concentrations 20
2.4. Viable Organism Analysis 20
2.4.1. Organisms Greater than 50 µm in Minimum Dimension 21
2.4.1.1. Sample Collection 21
2.4.1.2. Live/Dead and Size Analysis 21
2.4.2. Organisms 10 – 50 µm in Minimum Dimension 22
2.4.2.1. Sample Collection 22
2.4.2.2. Sample Analysis 23
2.4.3. Bacteria 23
2.4.3.1. Sample Collection 24
2.4.3.2. Sample Analysis 24
2.5. Ambient Physical/Chemical Water Conditions Analysis 25

2.6. Whole Effluent Toxicity Analysis 25
2.6.1. Standard Whole Effluent Toxicity Tests 25
2.6.2. Cold Whole Effluent Toxicity Tests 26
2.6.3. Determination of Total Residual Chlorine (TRC) and Total Residual Oxidant (TRO) Levels for WET Analysis 26
2.6.4. Statistical Analysis for WET Assay 26
2.6.5. Determination of Quality of Test Organisms for WET Assay 27
2.7. Data Management 27
2.7.1. Data Recording 27
2.7.2. Data Processing and Storage 28
2.8. Quality Assurance/Quality Control 28
2.8.1. Quality Assurance/Quality Control Activities 29
2.8.2. Standard Operating Procedures (SOPs) 29
2.8.3. Documents and Records 29
2.8.3.1. Notebooks 29
2.8.3.2. Safety, Operation and Maintenance Records 30

3.0. Results 30

3.1. Challenge Conditions 30
3.1.1. Physical/Chemical Challenge Conditions 30
3.1.2. Biological Challenge Conditions 31
3.2. Viable Organisms in Treated Discharge 33
3.2.1. Regulated Plankton 33
3.2.2. Regulated Microbes 34
3.3. Physical/Chemical Water Conditions 35
3.4. Residual Toxicity 37
3.4.1. TRC and TRO Concentrations in WET Tests 37
3.4.2. Whole Effluent Toxic Effects 39
3.4.2.1. Standard WET Results 39
3.4.2.2. Cold WET Results 39
3.4.3. Disinfection By-Products (DBPs) 42

4.0. Discussion of Results 44

5.0. Conclusions 45

References 45

Appendix 1. GSI Land-Based RDTE Facility: Technical Information 46
Appendix 2. GSI SOPs Relevant to SiCURE™ Tests 49
Appendix 3. Species List of Phytoplankton and Zooplankton Present 51
Appendix 4. Data Quality Objectives, Criteria and Results 52
Appendix 5. Operational Data Summary 58

1.0. INTRODUCTION

1.1. The Great Ships Initiative

The Great Ships Initiative (GSI)[1] is regional effort devoted to ending the problem of ship-mediated invasive species in the Great Lakes-St. Lawrence Seaway System and globally. In support of that goal, the GSI established superlative freshwater ballast treatment evaluation capabilities at three scales—bench, land-based, and on board ship.

The GSI awards its independent status-testing services to developers of ballast treatment systems and processes determined to be promising. GSI status-testing is performed at the scale appropriate to the state of development of the target treatment system, with the goal of facilitating the rapid progression of meritorious ballast treatment systems through the research and development and approval processes to a market-ready condition.

GSI has no involvement, intellectual or financial, in the mechanics, design or market success of the actual treatment systems it tests. To ensure that GSI tests are uncompromised by any real or perceived individual or team bias relative to test outcomes, GSI test activities are subject to rigorous quality assurance, quality control (QA/QC) procedures and documentation. This QA/QC attention also assures high quality and credible evaluation findings.

GSI has worked to standardize and intercalibrate its protocols to evaluate the performance of ballast water treatment systems with IMO guidelines, United States Environmental Protection Agency Environmental Technology Verification draft protocols, and other test facilities. GSI test protocols are as consistent with the requirements of the International Maritime Organization's (IMO) Convention for the Control and Management of Ships Ballast Water and Sediments (IMO, 2004) and federal requirements as practicable. In particular, GSI testing directly supports IMO G8 and G9 evaluations. GSI procedures, methods materials and findings are also not proprietary, and are publicly accessible on the GSI website (www.greatshipsinitiave.org).

Ms. Allegra Cangelosi of the Northeast-Midwest Institute is the Principal Investigator and Manager of the GSI. Researchers from the University of Wisconsin-Superior's Lake Superior Research Institute (LSRI), and the University of Minnesota-Duluth's Natural Resources Research Institute, among others, provide critical scientific and technical expertise and implementation services to GSI's biological research activities, and the GSI generally. Dr. Mary Balcer is the project's lead zooplankton ecologist. Dr. Euan Reavie leads all phytoplankton analysis. Mr. Matthew TenEyck, leads the bench-testing and Whole Effluent Toxicity (WET) tests. AMI Consulting Engineers provide engineering expertise in support of GSI testing activities. A GSI Advisory Committee comprising top-level officials of key stakeholder groups helps steer the GSI providing crucial assistance in making GSI award decisions and fund-raising. The GSI Advisory Committee includes elected leadership, environmental organizations, port directors and federal officials from the United States and Canada, and industry representatives. The American Great Lakes Ports Association advises the project, assuring that the GSI is meeting the needs of the maritime industry; and coordinating maritime industry and supply chain outreach.

[1] www.greatshipsinitiative.org

To date, all GSI tests are supported by general project funds which derive from federal, state and port grants and contributions, and in-kind contributions by industry, local government and universities. Over time, GSI will begin to charge treatment developers for a portion of the testing costs associated with type approval testing for United States regulatory purposes. The largest contributor of GSI operating funds is the United States Department of Transportation, including its Maritime Administration, and the Saint Lawrence Seaway Development Organization. GSI also receives significant funds and in-kind contributions from the National Oceanic and Atmospheric Administration, the Canadian St. Lawrence Seaway Management Corporation, the City of Superior, Wisconsin, and approximately ten U.S. and Canadian ports in the Great Lakes.

In September and October 2009, the GSI conducted land-based tests on the SiCURE™ Ballast Water Management System in cooperation with German Bundesamt für Seeschifffahrt und Hydrographie (BSH), i.e., the German Federal Maritime and Hydrographic Agency. During the series of five consecutive valid trials, the SiCURE™ Ballast Water Management System was evaluated for its ability to: (a) successfully treat ballast water without interruption, (b) meet IMO D-2 discharge standards after a five-day holding time, and (c) discharge water after the five day retention period that is environmentally benign (i.e., no residual toxicity) pursuant to United States Environmental Protection Agency water quality criteria.

1.2. The GSI Land-Based RDTE Test Facility

GSI tests reported here evaluated the biological efficacy of a ballast water treatment system at its purpose-built, land-based ballast treatment test facility located in the Duluth-Superior Harbor of Lake Superior (figure 1). The facility draws raw intake water from Duluth-Superior Harbor at 400 m^3/hr to 680 m^3/hr. This main flow of intake water can be amended with TSS and endemic Harbor algae just prior to entering the facility.

Figure 1. The GSI's Land-Based RDTE Facility in Superior, Wisconsin.

A Y-split in the intake piping at the facility simultaneously channels one half of the flow (200 m^3/hr to 340 m^3/hr) to a treatment track and the other half (also 200 m^3/hr to 340 m^3/hr) to a matched control track. The treatment track directs water through the experimental treatment system and into a 200 m^3 cylindrical retention tank. The control track by-passes the treatment system and channels water directly into a matched control retention tank. After storage, water is discharged sequentially from the treatment and control retention tanks at 340 m^3/hr to the harbor, or to a second set of facility retention tanks where it is then transferred to a wastewater treatment facility. A detailed design of the facility can be found in Appendix 1 and information on the facility's validation can be found at http://www.nemw.org/GSI/documents.htm.

Water is sampled continuously throughout ballasting functions (intake or discharge) through in-line sample points. Each sample point is made up of one to three identical sample ports with a center-located elbow-shaped pitot tube (90 ^{o}) bent towards the direction of water flow used to sample the water. This pitot design is based on a design developed and validated by the U.S. Naval Research Laboratory in Key West, Florida, and empirically at GSI. Intake sampling uses sample ports at paired intake sample points (SP#2 and SP#3) on the control and treatment tracks (figure 2). Discharge sampling occurs through sample ports at sampling points SP#9 or SP#10 (figure 2). All four SPs are made up of three sample ports.

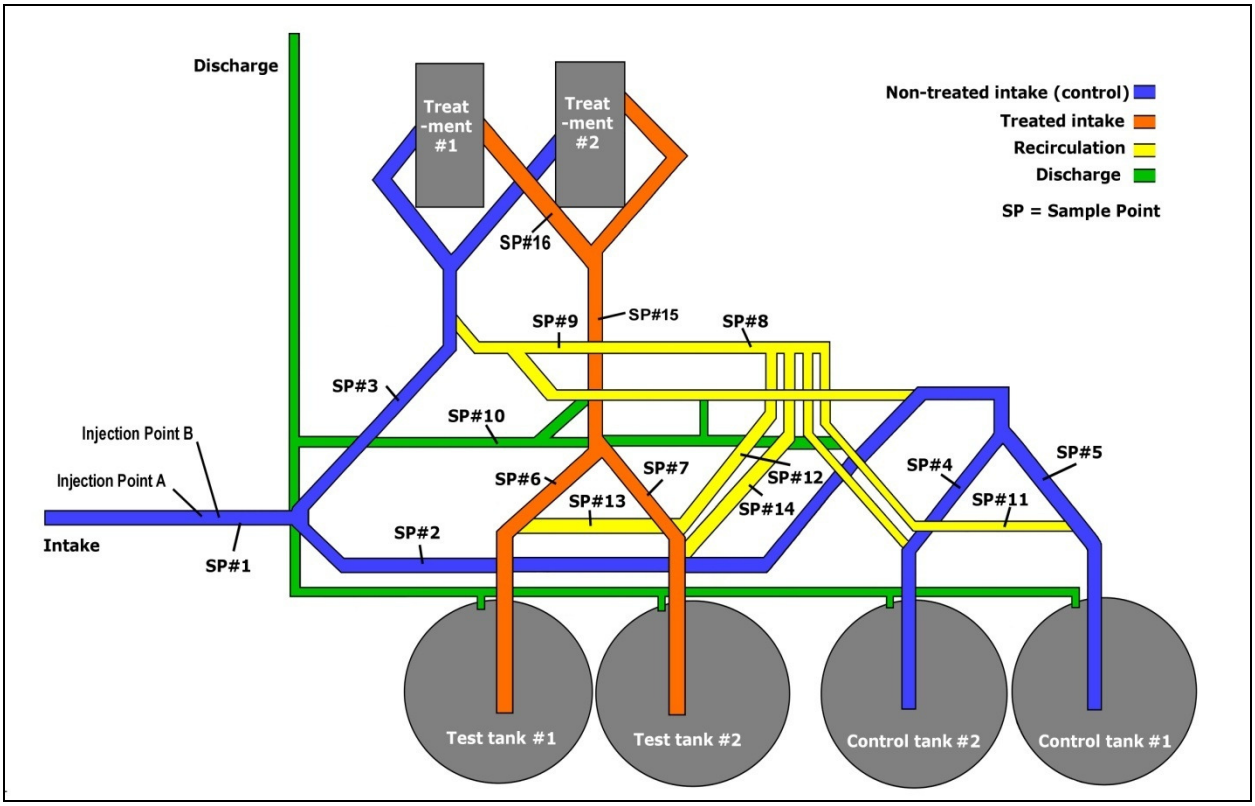

Figure 2. Simplified Schematic of the GSI Land-Based RDTE Facility Showing Location of Sample Points, Injection Points, Retention Tanks, and Treatment and Controls Tracks.

Sample water at a given sampling point (i.e., intake line of the control track, intake line of the treatment track, or the discharge line for the control and treatment tracks) is transferred simultaneously and continuously throughout ballasting operations (intake or discharge) from replicate sample ports to replicate 3.8 m^3 sample collection tubs via clean 3.8 cm ID flexible hoses and automated flow-controlled pneumatic diaphragm valves.

An on-site mobile field laboratory (figure 3a) and stationary structure (figure 3b) provide bench-scale facilities to support time sensitive assays associated with the GSI land-based tests, including live analysis of phytoplankton and zooplankton. The laboratories are climate-controlled, and have enough bench space to allow for simultaneous microscopic and analytical analysis of samples by multiple analysts.

Figure 3a. The GSI Mobile Field Laboratory.

Figure 3b. The GSI Stationary Laboratory.

1.3. The Siemens SiCURE™ Ballast Water Management System

Siemens Water Technologies developed the SiCURE™ Ballast Water Management System based on the maritime industry-proven Chloropac® Electrochlorination system for ships' cooling water piping. This latter system was first developed in the early 1970s and has been operated onboard over 2,000 vessels.

SiCURE™ has several unique features designed to provide effective treatment of ballast water while minimizing risk to the environment, the ship, and its crew. SiCURE™ is based on electrolysis of seawater and use of hypochlorite as an Active Substance at a viable, "meet the demand" dose. The system is designed to inject only as much Active Substance into ballast water as required to achieve the necessary level of disinfection. This approach is aimed at eliminating over-chlorination and associated risks of corrosion and generation of disinfection by-products.

The SiCURE™ test system evaluated at GSI in August - October 2009 used 5.5 m^3/hr side flow that, by passing through an electro-chemical generator, was enriched with about 200 mg/L of chlorine to treat 200 m^3/hr water flow. The system was designed to produce a maximum of 6 mg/L of chlorine, however the actual dose level was defined by an oxidation-reduction potential of the treated water. This control logic was designed to ensure a low biocide residual in the water to prevent any corrosion and environmental issues while meeting the IMO Convention's ballast water management standards.

1.4. Treatment Performance Requirements in Regulation D-2

The International Convention for the Control and Management of Ships Ballast Water and Sediments was adopted by consensus at a Diplomatic Conference at IMO in London on Friday 13 February, 2004. Annex D-2 of the Convention relates to ballast water performance standards for ships conducting ballast water management, including use of a ballast water treatment system to effectively treat the ballast water. The regulation states that ships conducting ballast water management shall discharge:

- Less than 10 viable organisms per m^3 greater than or equal to 50 μm in minimum dimension;
- Less than 10 viable organisms per mL less than 50 μm in minimum dimension and greater than or equal to 10 μm in minimum dimension; and
- Discharge of the indicator microbes shall not exceed the specified concentrations. The indicator microbes, as a human health standard, include, but are not be limited to:
  - Toxicogenic *Vibrio cholerae* (O1 and O139) with less than 1 colony forming unit (cfu) per 100 mL or less than 1 cfu per 1 gram (wet weight) zooplankton samples;
  - *Escherichia coli* - less than 250 cfu per 100 mL;
  - Intestinal *Enterococci* - less than 100 cfu per 100 mL.

1.5. Relationship of GSI Testing to G8 and G9 Requirements in IMO Convention

The fundamental approach of GSI is to conduct independent, scientifically-sound, rigorous, and quality assured evaluations of ballast water treatment systems. At the same time, GSI seeks immediate relevance of its freshwater land-based testing to regulatory processes such as those outlined in the IMO Convention and those under development domestically in the United States and Canada. To that end, GSI protocols are rooted in the essential features of the IMO G8 guidelines for testing, and the draft Environmental Technology Verification protocols under development by the United States Coast Guard and United States Environmental Protection Agency. All aspects of the testing infrastructure (e.g. flow rate, retention tank size, sample size, sample collection and analysis equipment and data logging) are directly consistent with these requirements. It formally partners with the Maryland-based Maritime Environmental Resource Center (MERC) to assure that GSI freshwater land-based testing can be directly complemented by comparable brackish/salt water testing.

With respect to physical/chemical and biological characteristics of the intake stream, GSI is fortunate in that its feed water source naturally meets many of the IMO G8 requirements for intake organism densities and physical/chemical conditions during the testing season (table 1). Prior to the tests reported here, GSI did not amend water quality in any way in order to avoid associated experimental artifacts. In particular, rapid changes in physical conditions (such as salinity or total suspended solids) as ambient organisms are being brought in with ballast water may cause significant mortality in ambient species, while spiked non-native species may be poorly adapted to ambient conditions and decline rapidly as well.

However, ambient conditions do fluctuate in all natural systems and the time window for this specific evaluation of the SiCURE™ ballast water management system was limited. Therefore, for the tests reported here, GSI agreed to augment intake water to better assure that initial challenge water conditions would meet requirements in the G8 guidelines throughout the trial series. During initial filling of control and test retention tanks, fine grade Arizona Test Dust, and concentrated algae harvested from the Duluth-Superior Harbor were metered into the intake stream before the flow split to the control and treatment tracks, to assure adequate concentrations of Total Suspended Solids (TSS) and live phytoplankton in intake and control discharge. Details

on these processes are provided below. Target intake levels of these parameters appear in Table 1. Actual levels during testing of the SiCURE™ system are reported in the results section of this document.

All current protocols, guidelines and requirements are open to interpretation especially in these early stages of implementation, and few if any facilities meet all requirements in the strictest sense. Accordingly, it is ultimately up to an Administration to decide if the system meets their requirements for Type Approval Certification. GSI, along with its sister facility, MERC, sought and received German Administration acceptance of its protocols prior to initiating this set of tests.

Table 1. Ranges of Various Physical and Biological Parameters in Ambient Water from Duluth-Superior Harbor (June – September) in Comparison to ETV/U.S. Coast Guard and IMO G8 Recommended Challenge Conditions.

Parameter	Proposed ETV/ U.S. Coast Guard†	Recommended IMO G8‡	Historic Ranges Duluth/Superior Harbor	Target Values for Amended Duluth-Superior Water for SiCURE™ Tests
Temperature (^{o}C)	10 – 35	–	9 – 22	9 - 22
Salinity (psu)	0 – 31	Two salinities, >10 psu difference	0 – 1	0 - 1
Total Suspended Solids (TSS) (mg/L)	> 15	> 50	2 – 21	50
Particulate Organic Carbon (POC) (mg/L)	> 1	> 5	0.5 – 2.1	<1
Dissolved Organic Carbon (DOC) (mg/L)	> 3	> 5	6 – 22	6 - 22
Zooplankton (> 50 μm/m^3)	> 10,000	> 100,000	100,000 - 3,000,000	100,000 – 3,000,000
Phytoplankton (10 - 50 μm/mL)	> 100	> 1,000	25 – 1,200	> 1,000
Heterotrophic Bacteria (CFU/mL)	> 1,000	> 10,000	> 1,000 MPN/mL	1,000 MPN/mL

† Generic Protocol for the Verification of Ballast Water Treatment Technologies: Draft v4 2008, U.S. EPA Environmental Technology Verification (ETV) Program under contract to U.S. Coast Guard.
‡ IMO Guidelines for the Approval of Ballast Water Management Systems (G8), October 2008, Annex 4 Resolution MEPC.174(58).

2.0. METHODS

The GSI land-based evaluation of the SiCURE™ Ballast Water Management System was carried out in keeping with the methods summarized in the MERC-GSI Test Plan (hereafter referred to as Test Plan) submitted to and approved by the German BSH and Siemens Water Technologies and available at http://www.nemw.org/GSI/MERC+GSITestPlan.pdf. Some refinements were necessitated by circumstance or opportunity. The following sections describe how each parameter and variable was sampled/analyzed during the SiCURE™ trials at GSI. Additional details can be found at www.nemw.org/GSI/SOPS.htm. All SOPs relevant to the SiCURE™ tests, as amended, also are presented Appendix 2. Any deviations from these SOPs during the performance of the SiCURE™ tests were minor and did not affect data quality. More detail on these deviations is available upon request.

2.1. Experimental Goals and Design

The SiCURE™ performance evaluation involved physical and biological characterization of water upon ballasting (uptake/intake of water) and comparisons of organisms in control versus treated water immediately following treatment and after a five-day in-tank holding time. Biological characterizations supported direct comparison with the IMO D-2 organism categories and standards. During a series of five consecutive valid trials, the treatment system was tested for its ability to: (a) successfully treat ballast water without interruption, (b) meet IMO D-2 discharge standards after a five-day holding time, and (c) discharge water after the five day retention period that is environmentally benign (i.e., no residual toxicity) pursuant to United States Environmental Protection Agency water quality criteria. A valid trial was one in which control discharge densities of live organisms were at least 10 times the IMO D-2 standard, consistent with IMO G8, and in which the facility operated properly.

2.1.1 Treatment System and Test Facility Calibration Trials

As provided in the Test Plan, GSI first conducted two calibration test runs of the SiCURE™ system. The calibration runs were undertaken to assure the facility and the treatment system were operating properly. During these calibration trials, adjustments to the system were documented only for internal reference by the treatment developer.

Necessary adjustments to the facility during this calibration period are documented here for the record. During the two calibration runs, line contamination by zooplankton was suspected which could have resulted in overestimates of live organisms in treated discharge. To assure facility performance and trial independence during the valid type approval test sequence, a thorough cleaning of the pipes leading from the control and treatment retention tanks to the sample collection tubs was undertaken well prior to the first discharge operation. This cleansing process involved filling the pipes with chlorinated water (4 September 2009), and retaining the chlorinated water in the pipes for the retention period. Just prior to Trial A discharge, water was drained from the pipes and then the pipes were thoroughly flushed with unchlorinated potable water (8 September 2009). After this flush, the discharge valves were closed, the sample collection tubs were partially filled with potable water, and a zooplankton sample was collected

from each tub and analyzed to assure no further organism contamination. In addition, potable water for cleaning was obtained from a tanker truck while the potable water reservoir tank at the GSI facility was thoroughly cleaned and chlorinated and checked for residual organisms.

2.1.2. Valid Trials

Once the two calibration trials were complete, the SiCURE™ treatment system was set for BSH type approval testing by the treatment developer, and the facility physical parameters were finalized and set for testing by the GSI Facility Manager. Any further adjustments to either component of the testing (the treatment system or the facility) were carefully noted and subject to QA/QC documentation. Five valid trials of the SiCURE™ system immediately followed the calibration runs.

Because the SiCURE™ tests at the GSI facility began later in the summer than anticipated, there was a need to complete the testing in the shortest span of time possible to assure adequate densities of organisms. To that end, GSI used its capacity to run concurrent tests to overlap trials condensing the period required for five trials to 22 days. Consistent with the Test Plan, treatment and control intake operations within a given trial were always simultaneous, and treatment and control discharge operations were always sequential. Table 2 shows the schedule of the five valid tests, including the sequence of intake and discharge operations.

Table 2. Timing of Intake and Discharge Operations for the Five Valid Siemens SiCURE™ Trials at the GSI Land-Based Facility in 2009.

Trial	Treatment	Timing of Operation			
		Intake		Discharge	
A	Treatment	4 September	09:48-10:45	9 September	12:41-13:44
	Control				15:15-16:08
B	Control	11 September	09:52-10:47	16 September	08:58-09:53
	Treatment				11:51-12:44
C	Treatment	12 September	09:58-10:56	17 September	09:03-9:56
	Control				11:56-12:51
D	Control	20 September	09:35-10:32	25 September	08:47-09:41
	Treatment				11:06-11:59
E	Treatment	21 September	09:38-10:36	26 September	09:02-09:56
	Control				11:38-12:38

To assure that discharging the control tank first in no way resulted in contamination of the treated discharge, the following steps were taken:

- Prior to Trial B, the PVC pipes leading from the intake/discharge line to active sample collection tubs were replaced with clean, flexible PVC tubing, which were removed, cleaned and inspected prior to each remaining treatment discharge operation.
- During all Test Trials A-E the interior of the retention tanks and sampling equipment (sample collection tubs, drain spout hose and nozzle, plankton nets, etc.) were cleaned according to GSI/SOP/LB/G/O/3 – *Procedure for Cleaning the Retention Tanks and Other Equipment at the GSI Land-Based RDTE Facility*.

2.1.3. Challenge Conditions

Ambient conditions were employed as the physical/chemical challenge conditions, except that consistent with the Test Plan, Fine Test Dust was added to the facility intake to assure TSS levels were in keeping with IMO G8 guidelines. The solids injection procedure is detailed in GSI/SOP/LB/G/O/5 – *Procedure for Injecting Organisms and Solids into the GSI Land-Based RDTE Facility*. Fine Test Dust (ISO 12103-1, A2; nominal 0-80 μm particle size; Powder Technology Incorporated; Burnsville, MN) was pre-weighed at LSRI, and sterilized by baking in an oven at 190 °C for one hour. One day prior to the test trial, ambient TSS was measured in the Duluth-Superior Harbor. On the day of the test trial, the volume of harbor water to be used in the Solids Injection System (SIS) tank was determined in order to augment the intake water to 60 mg/L TSS, and the SIS tank was filled. The prepared Fine Test Dust was poured into the SIS tank slowly to prevent clumping, and the dust was mixed for a minimum of 20 minutes prior to the start of the trial. The test dust was injected into the intake water for the entire duration of the fill at a constant rate using a peristaltic pump located at Injection Point A (figure 2).

Biological challenge conditions were ambient as well except that organism densities in the smaller of the two plankton size classes (i.e., 10 - 50 μm) were enhanced to assure consistency with IMO G8 required thresholds. The solids and phytoplankton injection systems were kept separate to reduce the risk of interference. The phytoplankton injection procedure is detailed in GSI/SOP/LB/G/O/5 – *Procedure for Injecting Organisms and Solids into the GSI Land-Based RDTE Facility*. One to two days prior to the test trial, phytoplankton entities from the Duluth-Superior Harbor were collected and concentrated using 20 - 50 μm plankton nets. The concentrated phytoplankton entities were stored at the GSI Land-Based RDTE Facility in holding ponds. Prior to injection, the water containing concentrated phytoplankton was mixed, sampled, and analyzed for viable cell density. In addition, a sample of Duluth-Superior Harbor water was collected to determine the ambient viable cell density. Based on the density of cells in the phytoplankton concentrate and ambient intake water, the volume of spiked concentrate that would be needed to achieve a concentration of 1500 cells/mL in intake water was calculated. This volume was added to an Organism Pressure Injection System (OPIS) vessel. The OPIS vessel was pressurized to 25 psi greater than the system pressure. The phytoplankton concentrate was added at a constant rate to the intake water via the pressure differential for the entire duration of the intake procedure via Injection Point B (figure 2).

A static mixer, installed in the main intake line just after the two metering systems (SIS and OPIS) and prior to the main system "Y split" (figure 2), assured that the concentrations of these additives was equivalent in the control and treatment tracks of the facility. At the end of the five day retention period, and just prior to discharge, the tanks were mixed manually with a small section of pipe which was pulled along the bottom of the retention tank for a period of 20 minutes to assure that live organisms, especially spiked algal particles, that may have settled to the bottom of the tank during the retention period were accounted for to the greatest extent possible in the discharge water analysis.

2.2. Water Chemistry Analysis

2.2.1. Total Residual Chlorine (TRC) and Total Residual Oxidant (TRO) Sample Collection

Samples for total residual chlorine (TRC) and total residual oxidants (TRO) analysis were collected during intake, retention and discharge. At intake:

- A 1 L whole water sample was collected from the control intake collection tub;
- A 1 L whole water sample was collected from the pre-treatment intake collection tub;
- Three 1 L whole water samples were collected from the filter backwash line at approximately 10, 30, and 50 minutes after the start of the intake procedure;
- Three 1 L post-treatment whole water samples were collected from a sample port directly downstream from the treatment system (SP #16) at approximately 10, 30, and 50 minutes after the start of the intake procedure;
- Three 1 L whole water samples were collected from a post-treatment sample point in the treatment system complex (for use exclusively by Siemens) at approximately 10, 30, and 50 minutes after the start of the intake procedure, and
- A 1 L whole water sample was collected post-treatment from a sample collection tub (#6). The post-treatment sample from collection tub #6 indicated how much the chlorine concentration had degraded over the approximately 45 minutes required to fill the collection tub.

During tank retention:

- A 1 L whole water sample was collected from the treatment tank on days 3, 4, and 5.

During discharge:

- A 1 L whole water sample was collected from the control discharge sample collection tub (#1), and
- Three 1 L whole water samples were collected from treatment discharge sample collection tubs (#'s 4, 5, and 6).

2.2.2. *Total Residual Chlorine (TRC) Determination*

Samples were analyzed for all forms of chlorine, i.e., free chlorine, hypochlorites, and chlorine bound to nitrogenous compounds. Analysis took place within 30 – 120 seconds after collection to minimize loss of chlorine due to reaction with oxidizable species in the sample.

For analysis, 100 mL of sample water were transferred from the sample collection container into a 150 mL beaker. 1.0 mL of potassium iodide reagent and 1.0 mL of acetate buffer reagent were added to each sample. Analysis was conducted with a Thermo Orion Model 97-70 Residual Chlorine Electrode connected to an Orion Model 290A pH/mV/ISE meter.

A 1000 mg/L iodate stock solution (1000 mg/L as chlorine) was used to prepare analytical standards, ranging in concentration from 0.100 to 10.0 mg/L daily. The standards were prepared in deionized water by making dilutions of the 1000 mg/L iodate stock. Potassium iodide reagent and acetate buffer were added to the iodate containing analytical standards. Iodate or chlorine present in the standards or samples oxidizes iodide to iodine in an acidic solution. The iodine concentration after the reaction was equal to the iodate or chlorine concentration present before the reaction. A calibration curve plotting log of the chlorine concentration (x-axis) versus the mV response from the Residual Chlorine Electrode (y-axis) was used to determine total residual chlorine concentrations in the samples.

Quality control sample analysis consisted of analyzing duplicate samples and samples spiked with known amounts of chlorine. Approximately 10 % of the samples were analyzed in duplicate. Spiked samples were only analyzed for the discharge samples because chlorine in the intake samples was reduced very rapidly and led to inaccurate spike recoveries. A TRC reference sample (QCI-780, ULTRA Scientific) was analyzed daily to confirm the accuracy of the calibration standards and samples.

2.2.3. Total Residual Oxidant (TRO) Determination

Total Residual Oxidant (TRO) analysis was conducted on the same samples as for TRC analysis with the exception of the system backwash samples due to high turbidity of these samples. As for TRC, TRO analysis took place within 30 to 120 seconds of sample collection to avoid sample degradation.

For analysis, 10 mL aliquots (or smaller amounts if sample concentration was above the concentration of highest calibration standard) of sample water were transferred from the sample containers into 30 mL beakers. The contents of a Hach DPD Total Chlorine Reagent packet were added to each sample. Between 3 and 6 minutes after the addition of the reagent the absorbance of the sample was determined using a Spectronic 20D set at a wavelength of 515 nm. The absorbance of an aliquot of each sample with no reagent added was also measured and the absorbance value was subtracted from that of the sample containing the reagent. This was to correct for the background absorbance of each sample.

A TRO calibration curve was prepared using standards prepared in deionized water utilizing a 100 mg/L chlorine stock solution. The standards, ranging in concentration from 0.50 to 3.0

mg/L, were analyzed in the same manner as described for the samples. The calibration data was not linear to the concentration of the upper standard so the calibration curve used a second order polynomial fit.

Quality control sample analysis consisted of analyzing duplicate samples and samples spiked with known amounts of chlorine. Approximately 10 % of the samples were analyzed in duplicate. Spiked samples were only analyzed for the discharge samples because chlorine in the intake samples was reduced very rapidly. A TRC reference sample (QCI-780, ULTRA Scientific) was analyzed daily to confirm the accuracy of the calibration standards and samples.

2.2.4. Selected Disinfection By-Products (DBPs) Determination

Samples were collected during intake and discharge for analysis of selected disinfection by-products (DBPs). On intake:

- Two 1 L whole water samples were collected from the filter backwash line, and
- Two 1 L samples were collected from the post-treatment sample collection tub (#6).

On discharge:

- Two 1 L whole water samples were collected from the control sample collection tub (#1), and
- Two 1 L whole water samples were collected from the treatment sample collection tub (#6).

Upon collection samples were stored in coolers with ice packs and transferred to the appropriate sample container by the GSI Senior Chemist. The samples were preserved appropriately, based on the analysis method, and were shipped cold to Analytical Laboratory Services in Middletown, Pennsylvania for analysis of DBPs that might likely be formed through the electrolytic chlorination process. The following analyses were conducted: trihalomethanes (THMs), haloacetic acids (HAAs), tribromoacetic acids (TBAs), and haloacetonitriles (HANs). In addition, sodium chlorate, sodium bromade, and sodium were analyzed

2.3. Water Quality Analysis

2.3.1. Analysis of Total Suspended Solids (TSS)

Samples for TSS analysis were collected during intake only as follows:

- Three 1 L whole water samples were collected from the pre-treatment line (SP #3) at approximately 10, 30, and 50 minutes after the start of the intake procedure, and
- Three 1 L whole water samples were collected from the post-treatment line at approximately 10, 30, and 50 minutes after the start of the intake procedure (SP #16).

Samples were collected in-line rather than from the sample collection tubs to avoid settling of suspended solids. This approach assured a more accurate measurement of solids and organic carbon in the intake water.

For analysis, the samples were vacuum filtered through pre-washed, dried, and pre-weighed Whatman 934-AH glass fiber filters. After the sample was filtered it was dried in an oven and brought to constant weight. TSS values were determined based on the weight of particulates on the filter and the volume of water filtered.

Quality control sample analysis consisted of analyzing approximately ten percent of the samples in duplicate. A TSS reference standard (QCI, 711, ULTRA Scientific) was analyzed on multiple occasions along with TSS samples to confirm the accuracy of the data being generated.

2.3.2. Analysis of Non-Purgeable Organic Carbon (NPOC) and Dissolved Organic Carbon (DOC), and Determination of Particulate Organic Carbon (POC) Concentrations

In these tests, NPOC was measured as a surrogate for total organic carbon (TOC), though it may be a slight underestimate of TOC. The analytical instrument used to measure NPOC purges the sample with air to remove inorganic carbon before measuring organic carbon levels in the sample. Thus, the NPOC analysis does not incorporate any volatile organic carbon which may be present in the sample.

Aliquots of the same samples that were analyzed for TSS were also analyzed for NPOC and DOC. Before the TSS analysis was conducted, aliquots of approximately 50 mL of the sample were transferred to glass bottles and acidified with hydrochloric acid for NPOC analysis. An aliquot of the filtrate from the TSS analysis was transferred to a glass bottle and acidified for analysis of DOC. A Shimadzu Total Organic Carbon Analyzer (Model TOC-5050A) was employed for analysis of both NPOC and DOC. Concentrations of NPOC and DOC were determined based on a calibration curve developed on the instrument using organic carbon standards prepared from potassium hydrogen phthalate. Reported particulate organic carbon concentrations (POC) were determined as the difference between the NPOC and DOC values for a sample.

Quality control sample analysis consisted of analyzing approximately 10 % of the samples in duplicate. A reference standard (#516 Demand, Environmental Resource Associates) was analyzed daily to confirm the accuracy of the data being generated.

2.4. Viable Organism Analysis

Sample water for analysis of viable organisms was simultaneously collected from replicate sample ports into identical 3.8 m^3 collection tubs during each intake or discharge operation. Volumes retained varied with the operation (intake versus discharge) and treatment (control versus treatment), depending upon anticipated organism concentrations, but were always greater than IMO guideline volumes. The water in each collection tub constituted an independent time integrated replicate sample of the 200 m^3 experimental water mass.

2.4.1. Organisms Greater than 50 µm in Minimum Dimension

2.4.1.1. Sample Collection

During the intake operation, i.e. the filling of the treatment and control 200 m^3 retention tanks, the following time-integrated sample volumes were collected by continuous flow from the intake lines simultaneously:

- 2 - 4 m^3 from the pre-treatment intake line,
- 2 - 4 m^3 from the control intake line, and
- 2 - 4 m^3 from the immediate post-treatment intake line.

During discharge:

- One 2 - 4 m^3 time-integrated sample was continuously collected from the control discharge, and
- Two to three replicate time-integrated samples of 2 - 4 m^3 each (total volume 4 to 9 m^3) were continuously collected from the treatment discharge.

Flow control valves and system logic assured that sample flow rates were equivalent and proportional to intake and discharge flow rates throughout each operation. Immediately after filling, the entire sample volumes were drained from the sample collection tubs and concentrated through 35 μm (50 μm diagonal dimension) plankton nets into 1 L cod-ends for microscopic examination. See *GSI/SOP/LB/RA/SC/6 - Procedure for Zooplankton Sample Collection*.

2.4.1.2. Live/Dead and Size Analysis

Live/dead analysis took place within two hours of collecting and concentrating the individual samples. Microzooplankton (e.g., rotifers, copepod nauplii, veligers, etc.) and macrozooplankton (e.g., crustanceans), all generally greater than 50 μm in minimum dimension (with the exception noted below) were analyzed simultaneously by separate taxonomists. Microzooplankton subsamples were analyzed in a Sedgewick Rafter counting chamber by examination under a compound microscope at a magnification of 40X to 100X. Macrozooplankton were analyzed in a Ward's Counting Wheel at a magnification of 20 to 30X using a dissecting microscope. Due to high densities, quantification of zooplankton in intake and control discharge samples required analysis of sub-samples and extrapolation to the entire sample volume. For these samples, a subsample was removed for analysis using a Henson-Stempel pipette. The treatment discharge samples had lower densities allowing analysis of a greater proportion of the sample. Treatment discharge samples were split in half using a Folsom Plankton Splitter. Half of the sample was analyzed for macrozooplankton and the other half was examined for microzooplankton. The proportion and total concentration of live versus dead organisms was determined using standard movement and response to stimuli techniques.

Quality assurance measures included live/dead analysis of at least 10 % of the samples by two separate taxonomists. The average percent similarity of taxonomic identification (live organisms

only) and the average relative percent difference of the number of live organisms counted were calculated for all second analyses. These data quality measurements were compared against the data quality objectives outlined in the GSI Quality Assurance Project Plan (GSI, 2009), and the percentage of data quality measurements meeting the data quality objectives was determined for microzooplankton and macrozooplankton separately.

Because freshwater zooplankton are in general smaller than their salt and brackish water counterparts, the larger regulated size category (greater than 50 μm in minimum dimension) does not incorporate all live zooplankton that may be present in a freshwater assemblage. This freshwater phenomenon raises special issues with respect to assessing zooplankton densities for the purpose of comparison with the IMO D-2 standard. It cannot be assumed that every zooplankton individual meets the size criterion in the strictest sense. Moreover, the smaller species must be analyzed using a compound microscope on a slide under a cover slip as noted above. Normally, this approach at times precludes direct sizing of an organism's minimum dimension during live analysis. During these tests, the Lecanid rotifer figured prominently in treated discharge samples. The minimum dimension of this saucer-shaped organism (depth) was never visible to the microscopist for direct measurement. To accommodate to this situation, following live analysis, samples were preserved with 10 % Lugol's solution and numerous Lecanid rotifer specimens were extracted and directly measured in all dimensions. This evaluation showed the organisms in this taxonomic group to be generally less than 50 μm in actual minimum dimension. Live individuals in the Lecanidae family present in treated discharge were therefore not added to the tally of regulated live organisms, but were counted and documented as live zooplankton for consideration by the regulatory authority. See *GSI/SOP/LB/RA/SA/2 - Procedure for Zooplankton Sample Analysis*.

2.4.2. Organisms 10 – 50 µm in Minimum Dimension

2.4.2.1. Sample Collection

For live analysis of organisms 10 – 50 μm in minimum dimension, one sample of 1 L was collected immediately after filling from the pre-treatment sample collection tub and one sample of 1 L was collected from the immediate post-treatment sample collection tub. During discharge, one sample of 1 L was collected from the control tank via sample collection tub, and three samples of 1 L each were collected from the replicate treatment sample collection tubs. Analysis occurred on-site within 1.5 hours of sample collection, with samples stored in coolers during the interim. Prior to analysis, samples were concentrated through a 10 μm plankton net and stored in a 25 mL sample container. See *GSI/SOP/LB/RA/SC/3 - Procedure for Algae/Small Protozoa Sample Collection*.

2.4.2.2. Sample Analysis

For analysis, a 1.5 mL subsample of the concentrated sample was transferred to a 2 mL sample container, with 4 μL of FDA stock solution added. The subsample was then allowed to incubate in the dark for 5 minutes. the 1.5 mL incubated algae sample was mixed and 1.1 mL was immediately transferred to a Sedgwick-Rafter cell, covered and placed on the stage of a microscope that was set for simultaneous observation using brightfield and epifluorescence. At least two horizontal transects were counted (an area known to reflect greater than 1 mL of original sample water). If time permitted, additional transects were counted to increase statistical power. This resulted in greater than 100 live cells counted from the pre-treatment intake and control discharge samples, and often fewer than 10 live cells counted in two transects for post-treatment intake and treatment discharge samples. Single cell entities and cells comprising colonial and filamentous entities were characterized as follows: alive = cells showing obvious green fluorescence from cell contents; dead = cells showing no or very little evidence of green fluorescence from cell contents; and ambiguous = cells or entities that cannot be clearly identified as alive or dead (should be uncommon). Records were kept of transect lengths and widths so that the total counted area and volume analyzed could be calculated later.

Entities less than 10 μm in all visible dimensions or greater than 50 μm in minimum dimension were not counted. Counting and measurement of all other entities followed standard procedures for individuals (length and width), colonies (e.g., number of cells, cell length and width) and filaments (e.g., number of cells, cell length and width or total filament length if cells could not be discerned). The remaining concentrated sample in the 25 mL bottle was archived using a preservative (formalin or Lugol's) for long-term storage.

Quality assurance measures included analysis of at least 10 % of the samples by two separate taxonomists using a dual-headed microscope (i.e., both taxonomists analyzed the same sample at the same time). The average percent similarity of taxonomic identification and the average relative percent difference of the number of live organisms counted were calculated for all second analyses. These data quality measurements were compared against the data quality objectives outlined in the GSI Quality Assurance Project Plan (GSI, 2009), and the percentage of data quality measurements meeting the data quality objectives was determined. See *GSI/SOP/LB/RA/SA/1 - Procedure for Algae/Small Protozoan Sample Analysis*.

2.4.3. Bacteria

Control and treatment samples were collected and analyzed for heterotrophic bacteria, two specific indicator pathogens: *E. coli* and enterococci, and viable toxigenic *Vibrio cholerae*.

2.4.3.1. Sample Collection

One liter whole water samples were collected as follows:

- On intake, three were collected immediately after filling from the pre-treatment sample collection tubs, and three were collected from the post-treatment sample collection tubs.
- On discharge, three were collected from a control sample collection tub and three were collected from a treatment sample collection tub.

All samples were collected according to *GSI/SOP/LB/RA/SC/4 – Procedure for Microbial Sample Collection*, and were immediately transported in an insulated cooler to the LSRI and analyzed as individual replicates.

2.4.3.2. Sample Analysis

Viable heterotrophic bacteria were enumerated according to *GSI/SOP/BS/RA/MA/1 – Procedure for Quantifying Heterotrophic Plate Counts (HPCs) using IDEXX's SimPlate® for HPC Method*. This method utilizes the IDEXX SimPlate® for HPC Method (IDEXX Laboratories, Inc.; Westbrook, Maine), which is based on IDEXX Laboratories' patented multiple enzyme technology.

The presence and abundance of *E. coli* (*GSI/SOP/BS/RA/MA/4 - Procedure for the Detection and Enumeration of Total Coliforms and E. coli Using IDEXX's Colilert®*) and enterococci (*GSI/SOP/BS/RA/MA/3 - Procedure for the Detection and Enumeration of Enterococcus using Enterolert™*) were determined using Colilert® and Enterolert™, respectively, which are both based on IDEXX's patented Defined Substrate Technology (DST®).

RNA and DNA colony blots were prepared at the LSRI following *GSI/SOP/LB/RA/SA/3 - Procedure for the Colony Blot Preparation for Enumeration of Culturable Vibrio chloreae*, a procedure in which the RNA or DNA of potential *Vibrio Cholerae,* and a limited number of additional species which may grow on the selective media, is fixed to a filter. Filters which exhibited colony growth were then shipped to the Maryland Pathogen Research Institute at the University of Maryland (College Park, MD) for analysis of potential viable toxigenic *V. cholerae*. Viable toxigenic *V. cholerae* is assayed with a commercial DFA kit specific for serogroup O1 (New Horizons Diagnostics) using monoclonal antibodies tagged with fluorescein isothiocyanate (FITC) (Hasan *et al*., 1994).

Quality control samples included a media blank and a positive control for *E. coli*/total coliforms and *Enterococcus spp*.; a media and peptone-saline diluent blank for heterotrophic bacteria; and a thiosulfate citrate bile salts sucrose (TCBS) agar blank, and DNA, and RNA blanks for *Vibrio spp.* Quality assurance measures included analysis of at least 10 % of the samples in duplicate. The average relative percent difference of all duplicates analyzed during the test trials was calculated separately for *E. coli*, *Enterococcus spp*., heterotrophic bacteria, and *Vibrio spp*. In

addition, at least 10 % of the samples were counted by two separate analysts and the average relative percent difference for all second counts was determined. These data quality measurements were compared against the data quality objectives outlined in the GSI Quality Assurance Project Plan (GSI, 2009), and the percentage of data quality measurements meeting the data quality objectives was determined.

2.5. Ambient Physical/Chemical Water Conditions Analysis

Temperature, salinity, dissolved oxygen, chlorophyll fluorescence, turbidity and pH were measured every 15 minutes during the test trials by two identical multi-parameter probes (calibrated according to manufactures specifications) placed, one each, into the control and test tanks. A calibrated, hand-held instrument was used to measure temperature, salinity, and dissolved oxygen from the control sample collection tub, the pre-treatment sample collection tub, and post-treatment sample collection tub during intake. In addition, temperature, salinity, and dissolved oxygen were measured during discharge from one control sample collection tub and two or three treatment sample collection tubs. See *GSI/SOP/LB/RA/SC/8 - Procedure for Collecting Physical/Chemical Data and Samples at the GSI Land-Based RDTE Facility*.

2.6. Whole Effluent Toxicity Analysis

GSI's whole effluent toxicity testing of the SiCURE™ system involved tests for chronic toxicity involving three freshwater species as arrayed in table 3. Toxicity tests were conducted on treated water from all five test trials.

Table 3. Standard Operating Procedures Relative to Whole Effluent Toxicity Testing.

GSI SOP Code	Test Type	Test Species	Test Endpoint
GSI/SOP/BS/RA/WET/1	Chronic	Cladoceran (*Ceriodaphnia dubia)*	Survival and Reproduction
GSI/SOP/BS/RA/WET/2	Chronic	Fathead Minnow (*Pimephales promelas)*	Survival and Growth
GSI/SOP/BS/RA/WET/3	Chronic	Green Alga (*Selenastrum capricornutum)*	Growth

2.6.1. Standard Whole Effluent Toxicity Tests

One set of tests—Standard Whole Effluent Toxicity Tests (Standard WET)—measured toxicity following five days storage in the land-based facility's 200 m^3 retention tanks. For these tests, samples were collected for analysis of residual toxicity at discharge. Sample water, stored in large HDPE containers, was immediately transported to the LSRI and was used immediately upon arrival to set up the Standard WET tests. Following initial set up of the tests, the remaining sample water was held at 4 °C in the dark to retain as much of the initial toxicity as possible, and

portions of the discharge sample water was warmed to 25 °C each day to serve as renewal water for the bioassay. A dilution series, using Duluth-Superior Harbor water, was run for each species. All tests were conducted in temperature-controlled incubators, water baths, or at ambient room temperature following the SOPs listed in table 3.

2.6.2. Cold Whole Effluent Toxicity Tests

A second set of trials—Cold Whole Effluent Toxicity (Cold WET) tests—was conducted to estimate the TRC, TRO and toxicity effects on organisms under cold water conditions. Though informative, it should be noted that in these assays the SiCURE™ system's internal logic that self-regulates chlorination of intake water based on oxidation-reduction potential (ORP) was not engaged resulting in higher chlorine levels in discharge samples than the treatment developer believes will occur under actual cold ambient conditions. Treated water was collected continuously from a sample port just downstream of the treatment system (SP #15) and diverted into a sample collection tub during the filling of the treatment retention tank. A 50 L whole water subsample was extracted and placed in a dark, refrigerator set at 4 ^{o}C for five days, thus simulating cold temperature tank retention. A portion of the sample water was warmed to 25 °C prior to initial set up of the Cold WET assay, and was warmed prior to daily renewal as described above for the Standard WET assay. There was no dilution series used for the Cold WET assay; test organisms (*Selenastrum capricornutum, Ceriodaphnia dubia, and Pimephales promelas*) were exposed to 100 % sample water. The Cold WET assay was conducted concurrently with the Standard WET assay following the SOPs listed in table 3.

2.6.3. Determination of Total Residual Chlorine (TRC) and Total Residual Oxidant (TRO) Levels for WET Analysis

Samples for TRC and TRO were collected from the stock exposure solutions daily. Analysis of these samples was conducted in the same manner as for the samples from the testing at the land-based facility (see sections 2.2 – 2.3) with the exception that smaller sample volumes (20 mL) were used due to the limited volume of sample available. Amounts of reagents added to the samples were adjusted so that a constant ratio of reagent to sample volume was used.

Standards were prepared, analyzed and subjected to quality control in the same manner as described for the land-based analysis (see sections 2.2 – 2.3). Spikes were only performed on deionized water due to the rapid degradation of chlorine in Duluth-Superior Harbor water.

2.6.4. Statistical Analysis for WET Assay

Data was analyzed using the Comprehensive Environmental Toxicity Information Systems program (version 1.7, Tidepool Scientific Software, McKinleyville, CA). Data analyses included normality, homogeneity of variance, one-way analysis of variance (ANOVA), and suite of tests for comparison between treatment means. Non-normal survival data was transformed using the natural log (EPA, 2002) to normalize the data. The endpoints of the chronic toxicity tests were:

- Lowest Observed Effect Concentration (LOEC), i.e., the lowest concentration in a test with a statistically significant difference in response from the control response.

- No Observed Effect Concentration (NOEC), i.e., the highest concentration in a test for which there was no statistically significant difference in response from that of the control.
- Median Lethal Concentration (LC_{50}), i.e., the concentration resulting in death of 50 % of exposed individuals by a predetermined time.
- Effective Concentration (EC_{25}), i.e., the concentration resulting in inhibiting a biological function (e.g. growth, reproduction) of 25 % of exposed individuals by a predetermined time.

These measures are extrapolations of statistical results to the experimental endpoints. Mean percent survival, mean dry weight values, mean cell density, and mean number of young per female for the laboratory controls and treatments were analyzed with a statistical significance level of 0.05.

2.6.5. Determination of Quality of Test Organisms for WET Assay

Whole Effluent Toxicity tests were initiated with healthy, vigorous organisms. To determine the overall health of the test organisms, reference toxicant tests were performed with *Ceriodaphnia dubia* and *Pimephales promelas* prior to the start of each definitive test or at least once per month. To determine the validity of the Standard and Cold WET tests, percent survival, dry weights of survivors, mean cell density, and mean number of young per female in the controls were compared to the test acceptability criteria published in the U.S. EPA's Short-term Methods for Estimating the Chronic Toxicity of Effluents and Receiving Waters to Freshwater Organisms (4th edition, 2002). Class I standardized weights were used as a check for the organism drying process and the performance of the balance. Daily and weekly calibration of test meters ensures optimal performance.

2.7. Data Management

2.7.1. Data Recording

Specific forms (i.e., by size class of organism, by scale of testing, etc.) were used to record sample collection and analysis data. Specific forms were also used to record sample custody, handling and storage information for those samples that were not analyzed on site at the land-based facility or at the LSRI (e.g., disinfection byproducts and *Vibrio cholorae* DNA and RNA colony blots). GSI Senior Personnel were responsible for ensuring that the forms were correctly filled out and timely. They were also responsible for maintaining the forms on file, creating electronic copies, and posting to the GSI SharePoint intranet website for storage and archiving. Technical systems audits (TSAs) were conducted during each intake and discharge operation for all test trials. During each TSA the GSI Assistant QA/QC officer observed data recording procedures related to sample collection, zooplankton analysis, phytoplankton analysis, and/or chemistry analysis and checked for compliance. Problems identified during each TSA were documented on the specific Technical Systems Audit Checklist for that trial's intake or discharge.

Following the completion of SiCURE™ test trials, a thorough review of all data sheets and laboratory notebooks was completed to ensure compliance with the documentation procedures outlined in all relevant GSI SOPs and in the GSI Quality Assurance Project Plan (QAPP). A Technical Systems Audit Checklist was completed during observation of sample collection and analysis activities, and during the data review. A QA/QC Log Book was used to document any additional data verification and validation activities. The TSA checklist and QA/QC log book were scanned to electronic format and posted to the GSI SharePoint website.

2.7.2. Data Processing and Storage

All original datasheets were stored in three-ring binders, each with a unique identification code specific to the SiCURE™ system tests. All log books were also given a unique identification code and are specific to SiCURE™. At least one backup copy (i.e., an electronic copy stored on the GSI SharePoint website) was made of all completed datasheets, and in some cases additional hardcopies were also made. The raw data is in the custody of the appropriate GSI Senior Staff Member until the final technical report has been approved, after which time it will be archived by the GSI Assistant QA/QC Officer on the University of Wisconsin-Superior campus for a period of at least five years.

A database designed using the Microsoft Access software suite was used to store, manage and process phytoplankton and zooplankton data. Microsoft Excel was used in conjunction with the database to create various dataset formats for subsequent analysis. Microsoft Excel was also used to store, manage, and process microbial, water chemistry, water quality, and whole effluent toxicity data. Database entry and maintenance was the responsibility of the GSI database management staff. Regular checks for data entry errors were conducted by comparing database records and Excel spreadsheets with the original paper data sheets. This was a manual inspection process and though rather time consuming, was an essential procedure for discovering errors. After examination and QA analysis, the data distribution files from the Access database were posted to the LSRI's Local Area Network (LAN) in an organized hierarchical folder system. A backup of the database was also made regularly to avoid any loss of data following computer/electronic glitches. Files were also posted to the GSI's SharePoint website to provide a secondary data backup/storage mechanism.

2.8. Quality Assurance/Quality Control

The GSI's Quality Assurance Project Plan (QAPP) outlines the management activities the GSI undertakes to assure the credibility of its land-based research activities. The plan covers QA/QC data quality indicators, evaluation processes, performance measures and acceptance criteria; instrument certification and calibration; personnel training requirements; QA/QC of documents and records; data management; and QA/QC assessments and response actions; etc. The plan is updated annually, with a specific process used for review, comment, approval, distribution and posting. It closely follows the format of the U.S. Environmental Protection Agency's (EPA's) "EPA Guidance for Quality Assurance Plans".

2.8.1. Quality Assurance/Quality Control Activities

The GSI Assistant QA/QC Officer conducted Technical Systems Audits (TSAs) during each Trial's intake and discharge operation, as well as a thorough data verification and validation following the completion of SiCURE™ tests to ensure that all information was complete, that SOPs were correctly followed, and that QA/QC objectives were met. The results of these observations were documented on a pre-printed TSA Checklist and in a QA/QC log book specific to SiCURE™. The GSI Assistant QAQC Officer created an electronic copy of each TSA Checklist and the QA/QC log book and posted those to the GSI SharePoint website. Once the final technical report is finalized, the original QA/QC data will be archived on the UWS campus for a period of at least five years.

2.8.2. Standard Operating Procedures (SOPs)

GSI SOPs were developed by the relevant GSI senior personnel in conjunction with the GSI PI and GSI Senior QA/QC Officer. The SOPs follow a common format and all include specific QA/QC procedures and metrics. The Senior QA/QC Officer is responsible for distributing the SOPs to the relevant parties for approval. Draft and final copies of all SOPs relevant to the SiCURE™ tests were posted to the GSI SharePoint website; the final version was also posted to the GSI public website (www.greatshipsinitiative.org). SOPs were updated on an as-needed basis.

2.8.3. Documents and Records

The GSI Senior QA/QC Officer is responsible for maintaining all electronic documents and records for a period of five years unless custody is transferred using a chain of custody form. Electronic versions of all GSI documents and records are saved to the GSI SharePoint website once complete. Hard copies of GSI documents and records are scanned and also saved to the GSI Sharepoint website. Due care and diligence will be taken to properly dispose of documents and records that are no longer required after the five year period has lapsed. Disposal procedures will involve electronic deletion of documents and records from the GSI SharePoint website and the personal computers of GSI personnel, as well as manual shredding of hard copies.

2.8.3.1. Notebooks

Bound field and laboratory notebooks were used to record observations, sampling details and on-site laboratory and field measurements. These notebooks were assigned a unique identification code by the GSI Assistant QA/QC Officer, in order to maintain a record of all laboratory notebooks specific to the SiCURE™ tests. Notebooks were also used to record instrument and equipment calibration and maintenance information. All notebooks were examined periodically during the Technical Systems Audits by the GSI QA/QC officers and were checked for compliance with GSI SOPs following the completion of testing. Problems identified by the periodic QA/QC review were documented and included in a training/response file.

2.8.3.2. Safety, Operation and Maintenance Records

The GSI Land-Based RDTE Facility Operations Manager, along with safety staff at AMI Consulting Engineers (Duluth, MN) provided safety training to all relevant GSI personnel prior to the start of the SiCURE™ tests. The GSI Land-Based RDTE Facility Operations Manager ensured that all forms associated with safety, operation and maintenance (i.e., confined space entry permit forms) were correctly filled out and maintained on file.

3.0. RESULTS

Five sequential valid tests of the Siemens SiCURE™ Ballast Water Management System were completed consistent with the Test Plan accepted by the German BSH as meeting IMO G8 and G9 guidelines. Standard and Cold WET chemical assays were conducted in conjunction all of these trials, and valid Standard and Cold WET biological assays were completed with two to five of the these trials, depending upon the test species and assay type.

3.1. Challenge Conditions

3.1.1. Physical/Chemical Challenge Conditions

Dissolved organic carbon (DOC) and total suspended solids (TSS) values were in the range or well in excess of the IMO recommended minimum. Intake water salinity during these tests was always less than 1 PSU. Ambient particulate organic carbon (POC) was consistently below the IMO guideline across trials, probably due to the late-season timing of the tests. A summary of physical/chemical conditions of intake and discharge water along with the recommended ranges in the IMO G8 guidelines appear in table 4.

Table 4. Average Concentration (± Std. Dev.) of Total Suspended Solids (TSS), Dissolved Organic Carbon (DOC), and Particulate Organic Carbon (POC) in Challenge Water During Five Trials of the Siemen's SiCURE™ Ballast Water Management System.

Parameter	IMO G8 Guideline	Sample	Trial A	Trial B	Trial C	Trial D	Trial E
TSS (mg/L)	>50	Intake	34.2 ± 9.4	53.1 ± 0.8	54.7 ± 3.2	53.0 ± 2.6	54.4 ± 1.1
		Post-Treatment	36.5 ± 5.9	48.1 ± 1.6	47.0 ± 0.9	49.2 ± 2.7	47.2 ± 0.8
DOC (mg/L)	>5	Intake	7.8 ± 0.03	8.4 ± 0.3	8.5 ± 0.2	8.8 ± 0.2	8.9± 0.2
		Post-Treatment	7.7 ± 0.2	8.9 ± 1.0	8.6 ± 0.2	9.1 ± 0.2	8.3 ± 0.1
POC (mg/L)	>5	Intake	0.3 ± 0.4	0.0 ± 0.4	0.1 ± 0.2	0.5 ± 0.5	0.6 ± 0.6
		Post-Treatment	0.7 ± 0.5	0.0 ± 1.0	0.2 ± 0.4	0.2 ± 0.4	1.3 ± 0.1
Salinity (PSU)	<3	Intake and Discharge	<1	<1	<1	<1	<1

3.1.2 Biological Challenge Conditions

Densities of live organisms on intake and control discharge were consistent with or exceeded IMO G8 guidelines during all five trials. In the greater than 50 μm size class, the intake density of live organisms ranged 287,920 to 1,037,822 with an average of 656,824, meeting the required density of 100,000 live organisms per m^3. The density of live organisms in the control discharge samples ranged from 321,058 to 742,741, with an average of 463,141, well exceeding the required density of 100 per m^3. Intake concentrations of the smaller planktonic organisms (10 - 50 μm) also were consistently greater than the required 1000 cells/mL (ranging from 1179.6 to 1832.5 per mL with an average of 1580.1). The control discharge densities of these smaller organisms also exceeded the G8 requirement of 100 live cells per mL (with the exception of the Trial E for which the value was 95.6) with an average of 150.3. Table 5 summarizes these values.

Table 5. Live Plankton Concentrations in Test Facility Intake Water and in Control Discharge Across Trials.

Live Organism Size Category	IMO G8 Guideline	Sample	Trial A	Trial B	Trial C	Trial D	Trial E
> 50 μm (#/m^3)	>100,000	Intake	769,661	627,566	1,037,822	287,920	561,153
	>100	Control Discharge	321,058	486,506	330,787	434,611	742,741
10 – 50 μm (#cells/mL)	>1000	Intake	1179.6	1832.5	1563.1	1683.2	1642.1
	>100	Control Discharge	178.8	204.9	136.9	135.4	95.6

Plankton diversity also met IMO requirements. The zooplankton community at the test site was dominated by the rotifers Keratella (loricate) and Polyarthra and Synchaeta (illoricate or soft-bodied) which comprised over 80 % of total density. Copepod nauplii, dreissenid mussel veligers, copepod copepedites, and bosminid cladocerans were also common in the zooplankton community. The density of live soft-bodied rotifers decreased considerably over the five day holding time of some of the trials, and was extremely low upon discharge. Densities of loricate (hard bodied) rotifers decreased little or in some cases increased during the holding period in the control water mass. The smaller regulated size class (10 – 50 μm) was dominated by phytoplankton entities of diatoms, green algae, blue-green algae, chrysophytes and cryptophytes. Protozoans, including ciliates and flagellates, were also present, comprising up to 3 % of the assemblages in intake samples. Dominant taxa during these trials were *Aulacoseira* spp. (filamentous diatom), *Melosira* spp. (filamentous diatom), *Cyclotella* spp. (single-celled centric diatom), *Asterionella formosa* (colonial pennate diatom), *Fragilaria* spp. (filamentous diatom), *Oscillatoria limnetica* (filamentous blue-green), *Pandorina morum* (colonial green), and *Rhodomonas* spp. (single-celled cryptophyte).

Microbial organism concentrations in the intake and control discharge samples during the SiCURE^{TM} trials are provided in table 6.

Table 6. Microbial Organism Concentrations in Test Facility Intake Water and Control Discharge Across Trials.

Microbial Organism	IMO G8 Guideline	Sample	Trial A	Trial B	Trial C	Trial D	Trial E
E. Coli (MPN/100 mL)	N/A	Intake	31	213	51	9	8
	NA	Control Discharge	< 1	1.0	1.0	< 1	1.0
Toxigenic V. cholerae (CFU/100 mL)	N/A	Intake	< 1	< 1	< 1	< 1	< 1
	N/A	Control Discharge	< 1	< 1	< 1	< 1	< 1
Enterococci (MPN/100 mL)	N/A	Intake	86	434	640	660	148
	N/A	Control Discharge	35	2275	295	149	54
Total Heterotrophic Bacteria (MPN/mL)	N/A	Intake	1217	8133	3667	2900	467
	NA	Control Discharge	1650	1200	500	88	900

3.2. Viable Organisms in Treated Discharge

3.2.1 Regulated Plankton

Using the methods noted in the methods section for determining the numbers of live organisms that fit within the regulated size categories of plankton, organism densities in discharge water from the five consecutive trials consistently met the IMO D-2 standard[2]. The density of live organisms > 50 μm size class decreased dramatically immediately post-treatment (> 99.9 % reduction), and ranged from 38 to 193 individuals per m^3. Bosminids, copepod copepodites, chironomids, dreissenid veligers, and a few Keratella and Lecanid rotifers were observed in the post-treatment samples. Soft-bodied rotifers were entirely absent from the subsamples analyzed. In post-retention discharge samples, the average density of live organisms in the > 50 μm size class ranged from 1 to 7 individuals per $m^{3,}$ meeting G8 requirements (table 7).

In the smaller size class, numbers of live organisms in the immediate post-treatment samples also were much lower than at intake, ranging from 1 to 13 per mL. Concentrations in discharge samples after the five day retention period were consistently less than 10 cells/ml, meeting G8 requirements for treatment.

[2] As noted in the methods section, not all zooplankton in the natural freshwater assemblage meet the strict definition of 50 μm in minimum dimension. The total average density of live zooplankton in discharge samples ranged from 2 to 20 per $m^{3.}$ The live organisms in these discharge samples were chironomid larvae, copepod nauplii, and Lecanid rotifers, with the latter being generally below the regulated size range as noted above. A list of all live zooplankton by taxonomic category and size class appear in Appendix 3.

Table 7. Live Plankton Densities within Regulated Size Categories in Test Facility Post-Treatment Intake and Discharge Across Trials.

Live Organism Size Category	IMO G8 Guideline	Sample	Trial A	Trial B	Trial C	Trial D	Trial E
> 50 μm (#/m^3)	NA	Post-Treatment	193	38	151	176	53
	<10/m^3	Discharge	5	7	4	4	1
10 – 50 μm (#cells/mL)	NA	Post-Treatment	6.8	1	5.8	4.8	13.5
	<10 /mL	Discharge	0.0	0.0	0.0	6.8	2.9

3.2.2. Regulated Microbes

Immediate post-treatment, and post-treatment post-retention microbial samples were consistently below the IMO G8 standard for *E. Coli* and *enterococcus*, though intake levels and control discharge levels of *E. coli* were also below G8 discharge limits for all trials (table 8). *Enterococcus* levels in treated discharge were always 1 to 3 logs lower than control discharge and never above 10 MPN per 100 mL (table 8). Although heterotrophic plate counts immediately following treatment averaged an MPN fewer than ten per mL, post-treatment post-retention MPN average increased to 4.1E+05 per mL (table 8). This increase was not observed in the post retention control samples.

Table 8. Microbial Organism Concentrations in Test Facility Post-Treatment Intake and Discharge Across Trials.

Microbial Organism	IMO G8 Guideline	Sample	Trial A	Trial B	Trial C	Trial D	Trial E
E. Coli (MPN/100 mL)	N/A	Post-Treatment Intake	< 1	< 1	< 1	< 1	< 1
	< 250 CFU/ 100 mL	Discharge	< 1	< 1	< 1	< 1	< 1
Toxigenic V. cholerae (CFU/100 mL)	N/A	Post-Treatment Intake	< 1	< 1	< 1	< 1	< 1
	< 1 CFU *V. cholerae*/ 100 mL	Discharge	< 1	< 1	< 1	< 1	< 1
Enterococci (MPN/100 mL)	N/A	Post-Treatment Intake	< 1	< 1	< 1	< 1	< 1
	< 100 CFU/ 100 mL	Discharge	< 1	3	< 1	2	1
Total Heterotrophic Bacteria (MPN/mL)	N/A	Post-Treatment Intake	<2	<2	<2	4	5
	N/A	Discharge	220,000	680,000	280,000	423,333	463,333

3.3. Physical/Chemical Water Conditions

Total residual oxidant (TRO) and total residual chlorine (TRC) levels in the pre- and post-treatment intake water, filter backwash, and control intake water are shown in table 9. As expected, levels of TRC and TRO in intake pre-treatment and control intake water were below regulatory concern. Also, as expected, in immediate post-treatment intake water samples the TRO and TRC were well above the allowable levels for discharge into receiving waters. Filter backwash, however, which was affected by low level electrolytic chlorination of the intake stream, was consistently below detection limits of TRC due to low initial levels, and rapid degradation of chlorine by high organic loads.

Table 9. Average Total Residual Chlorine (TRC) and Total Residual Oxidant (TRO) Concentration (mg/L, ± std. dev.) from Trials A-E at Intake.

Sample Location	Trial A		Trial B		Trial C		Trial D		Trial E	
	TRC	TRO	TRC	TRO	TRC	TRO	TRC	TRO	TRC	TRO
Control Intake (Tub 1)	<0.008	0.031	<0.008	0.027	<0.008	0.032	<0.008	0.027	<0.008	0.030
Pre-Treatment Intake (Tub 4)	<0.008	0.035	<0.008	0.030	<0.008	<0.027	<0.008	0.033	<0.008	0.030
Immediate Post Treatment (Siemens Sample Port)	4.28 ± 0.21	4.20 ± 0.36	3.37 ± 0.03	3.36 ± 0.07	3.06 ± 0.21	3.08 ± 0.14	3.33 ± 0.28	3.31 ± 0.11	3.64 ± 0.07	3.49 ± 0.07
Immediate Post Treatment (GSI Sample Port)	5.23 ± 1.44	5.08 ± 0.75	4.19 ± 0.34	4.04 ± 0.45	3.67 ± 0.35	4.02 ± 0.72	3.89 ± 0.58	4.04 ± 0.50	4.58 ± 0.52	4.53 ± 0.50
Immediate Post Treatment (Tub 6)	1.99	2.29	1.66	1.75	1.31	1.45	1.85	1.87	1.96	1.84
Filter Backwash (Sample Port)	<0.008	-	<0.008	-	<0.008	-	<0.008	-	<0.008	-

After five days retention in the 200 m^3 tanks, treated discharge samples had significantly higher levels than control discharge samples, but TRC levels in treated discharge was always 0.070 mg/L or less (table 10).

Table 10. Average Total Residual Chlorine (TRC) and Total Residual Oxidant (TRO) Concentration (mg/L, std. dev.) from Trials A-E on Discharge.

Sample Location	Trial A		Trial B		Trial C		Trial D		Trial E	
	TRC	TRO	TRC	TRO	TRC	TRO	TRC	TRO	TRC	TRO
Treatment Retention Tank (Day 5, Prior to Discharge)	0.058	0.084	0.064	0.065	0.055	0.062	0.070	0.070	0.069	0.064
Control Discharge (Tub 1)	<0.008	<0.027	<0.008	<0.027	<0.008	0.028	<0.008	<0.027	<0.008	<0.027
Treatment Discharge (Tubs 4, 5, and 6)	0.063 ± 0.003	0.086 ± 0.002	0.069 ± 0.002	0.071 ± 0.001	0.058 ± 0.002	0.065 ± 0.003	0.071 ± 0.001	0.078 ± 0.004	0.064 ± 0.006	0.083 ± 0.008

3.4. Residual Toxicity

GSI conducted Cold and Standard WET assays for each trial in the five valid trials series. The results showed fairly consistent effects with respect to residual TRC and TRO concentrations across trials. There was no evidence of acute toxic effects even in the 100 percent effluent samples. Outcomes of chronic biological toxicity assays varied somewhat across trials and species within each assay in the undiluted effluent samples. However, results consistently showed no toxicity in the more diluted samples.

3.4.1. TRC and TRO Concentrations in WET Tests

Across assays, in 100 percent effluent, TRC concentrations were higher in the Cold WET solutions, than Standard WET solutions. For the *P. promelas* and *C. dubia* assays, the mean TRC concentration was 0.032 - 0.040 mg/L in the Standard WET assays, and 0.088-0.118 mg/L, in the Cold WET assays (table 11). In the *S. capricornutum* tests, the initial TRC concentrations ranged from 0.025 - 0.044 mg/L in the Standard WET assays, and from 0.097 - 0.134 mg/L in the Cold WET tests. In all tests TRC concentrations were below the limit of quantification (LOQ) in dilutions of whole effluent (tables 11 and 12).

The range of TRO concentrations also differed between Standard WET and Cold WET solutions. In 100 % effluent across trials mean TRO concentrations for the *P. promelas* and *C. dubia* ranged from 0.060 - 0.070 mg/L in Standard WET solutions, and 0.110 – 0.138 mg/L in Cold WET solutions (table 13). The initial TRO concentrations across trials for the *S. capricornutum* bioassays ranged from 0.045 - 0.060 mg/L (table 13). In Cold WET solutions they were 0.108-0.127 mg/L.

Table 11. Mean (± Std. Err.) Total Residual Chlorine (TRC) Concentration (mg/L) of Renewal Water for Each Trial of *P. promelas* and *C. dubia* WET Bioassays.

			Exposure						
			Standard Whole Effluent Toxicity Bioassay						Cold WET
Trial	PPW	CDW	0%	6.25%	12.5%	25%	50%	100%	100%
A	<0.008 (NA)	<0.008 (NA)	<0.008 (NA)	<0.008 (NA)	<0.008 (NA)	<0.008 (NA)	<0.008 (NA)	0.040 (0.001)	0.102 (0.003)
B	<0.008 (NA)	<0.008 (NA)	<0.008 (NA)	<0.008 (NA)	<0.008 (NA)	<0.008 (NA)	<0.008 (NA)	0.032 (0.002)	0.094 (0.005)
C	<0.008 (NA)	<0.008 (NA)	<0.008 (NA)	<0.008 (NA)	<0.008 (NA)	<0.008 (NA)	<0.008 (NA)	0.034 (0.002)	0.088 (0.005)
D	<0.008 (NA)	<0.008 (NA)	<0.008 (NA)	<0.008 (NA)	<0.008 (NA)	<0.008 (NA)	<0.008 (NA)	0.039 (0.002)	0.108 (0.005)
E	<0.008 (NA)	<0.008 (NA)	<0.008 (NA)	<0.008 (NA)	<0.008 (NA)	<0.008 (NA)	<0.008 (NA)	0.039 (0.001)	0.118 (0.006)

NA-Not appropriate. If one or more value was less than 0.008 mg/L this made calculating a meaningful a standard error inappropriate. PPW – Fathead minnow reference control. CDW – *C. dubia* reference control.

Table 12. Total Residual Chlorine (TRC) Concentration (mg/L) of the Initial Exposure Solution for Each Trial of *S. capricornutum* WET Bioassays.

	Exposure							
		Standard Whole Effluent Toxicity Bioassay						Cold WET
Trial	SCW	0%	6.25%	12.50%	25%	50%	100%	100%
A	<0.008	<0.008	<0.008	<0.008	<0.008	<0.008	0.044	0.097
B	<0.008	<0.008	<0.008	<0.008	<0.008	<0.008	0.025	0.105
C	<0.008	<0.008	<0.008	<0.008	<0.008	<0.008	0.037	0.101
D	<0.008	<0.008	<0.008	<0.008	<0.008	<0.008	0.039	0.134
E	<0.008	<0.008	<0.008	<0.008	<0.008	<0.008	0.036	0.117

SCW – *S. capricornutum* (green algae) reference control.

Table 13. Mean (± Std. Err.) Total Residual Oxidant (TRO) Concentration (mg/L) of Renewal Water for Each Trial of *P. promelas* and *C. dubia* WET Bioassays.

	Exposure								
			Standard Whole Effluent Toxicity Bioassay						Cold WET
Trial	PPW	CDW	0%	6.25%	12.5%	25%	50%	100%	100%
A	<0.027 (NA)	<0.027 (NA)	<0.027 (NA)	<0.027 (NA)	<0.027 (NA)	<0.027 (NA)	0.038 (0.003)	0.060 (0.006)	0.118 (0.008)
B	<0.027 (NA)	<0.027 (NA)	<0.027 (NA)	<0.027 (NA)	<0.027 (NA)	0.030 (NA)	0.039 (0.002)	0.062 (0.005)	0.110 (0.013)
C	<0.027 (NA)	<0.027 (NA)	<0.027 (NA)	<0.027 (NA)	<0.027 (NA)	0.027 (NA)	0.040 (0.002)	0.062 (0.002)	0.109 (0.011)
D	<0.027 (NA)	<0.027 (NA)	<0.027 (NA)	<0.027 (NA)	<0.027 (NA)	0.029 (NA)	0.038 (0.002)	0.067 (0.003)	0.121 (0.012)
E	<0.027 (NA)	<0.027 (NA)	<0.027 (NA)	<0.027 (NA)	<0.027 (NA)	<0.027 (NA)	0.045 (0.002)	0.070 (0.004)	0.138 (0.011)

NA-Not appropriate. If one or more value was less than 0.027 mg/L this made calculating a meaningful a standard error inappropriate. PPW – Fathead minnow reference control. CDW – *C. dubia* reference control.

Table 14. Total Residual Oxidant (TRO) Concentration (mg/L) of the Initial Exposure Solution for Each Trial of *S. capricornutum* Bioassays.

		Exposure						
		Standard Whole Effluent Toxicity Bioassay						Cold WET
Trial	SCW	0%	6.25%	12.5%	25%	50%	100%	100%
A	<0.027	<0.027	<0.027	<0.027	0.034	0.037	0.060	0.114
B	0.036	<0.027	<0.027	<0.027	0.029	0.032	0.045	0.127
C	0.036	<0.027	<0.027	<0.027	0.030	0.033	0.060	0.124
D	0.033	<0.027	<0.027	<0.027	<0.027	0.042	0.057	0.123
E	<0.027	<0.027	<0.027	<0.027	0.030	0.040	0.054	0.108

SCW – *S. capricornutum* (green algae) reference control.

3.4.2. Whole Effluent Toxic Effects

3.4.2.1. Standard WET Results

In the Standard WET tests, no statistically significant acute toxic effect (i.e., reduction in survival) was detected across trials and test species (tables 15, 17, and 18). With respect to chronic toxicity in these tests, no effects were detected at any effluent dilution relative to exposed fish *P. promelas* (table 15), or any other test species at 50 % effluent dilution or below. Phytoplankton (*Selenastrum*) assays for two trials (Trials A and E) met data quality criteria.[3] In Trial A, an estimated 77 % effluent dilution appeared sufficient to reduce algal population growth by 25 %, while in Trial E no reduction in cell growth was observed even in 100 % effluent (table 16). Chronic (i.e., reproductive) effects in the zooplankton species *C. dubia* were observed in 100 % effluent in Standard WET tests in one out of two trials (tables 17 and 19; Trial A; $p < 0.05$). An estimated 43 % effluent dilution in Trial A, would reduce the mean number of young produced per female by 25 % (table 17). No chronic toxicity was observed in the other valid trial (Trial B).

3.4.2.2. Cold WET Results

The Cold WET assays involved only 100 percent effluent solutions, and measured TRC and TRO values were significantly higher than in the Standard WET assays. Fathead minnow was unaffected across five trials. Acute toxicity (increased mortality) of *C. dubia* was measured in one out of two valid trials (table 18; Trial A; $p<0.05$). There was chronic toxicity (reduced reproduction) detected in *C. dubia* in the same trial (table 19; Trial A; $p<0.05$). No such effects on *C. dubia* were detected in the other valid trial (tables 18 and 19; Trial B). In addition, 100 % effluent samples had no chronic toxicity effect on the algal species *Selenastrum* (data not shown).

[3] Starting densities exceeded GSI standard operating procedure (SOP is based on US EPA methods).

Table 15. Effective Concentration in 25 % of Test Organisms (EC_{25}), No-Observed-Effect-Concentration (NOEC) and Lowest-Observed-Effect-Concentration (LOEC) for *Pimephales promelas* Measured in terms of Reduced Survival or Growth of the Test Individuals when Exposed to Effluent during Standard WET Tests.

	Acute Toxicity (%Effluent)			Chronic Toxicity (%Effluent)		
Trial	LC_{50} (95% CI)	NOEC	LOEC	EC_{25} (95% CI)	NOEC	LOEC
A	>100	100	>100	>100	100	>100
B	>100	100	>100	>100	100	>100
C	>100	100	>100	>100	100	>100
D	>100	100	>100	>100	100	>100
E	>100	100	>100	>100	100	>100

Table 16. Effective Concentration in 25 % of Test Organisms (EC_{25}), No-Observed-Effect-Concentration (NOEC) and Lowest-Observed-Effect-Concentration (LOEC) for *Selenastrum capricornutum* Measured in terms of Reduced Cell Growth when Exposed to Effluent during Standard WET Tests.

	Chronic Toxicity (%Effluent)		
Trial	EC_{25} (95% CI)	NOEC	LOEC
A	77 (N/A)	50	100
B[a]	-	-	-
C[a]	-	-	-
D[a]	-	-	-
E	>100	100	>100

[a] Inadequate survival of or too much variation in control samples.

Table 17. Effective Concentration in 25 % of Test Organisms (EC_{25}), No-Observed-Effect-Concentration (NOEC) and Lowest-Observed-Effect-Concentration (LOEC) for *Ceriodaphnia dubia* Measured in terms of Reduced Survival or the Mean Number of Young Produced per Female when Exposed to Effluent during Standard WET Tests.

	Acute Toxicity (%Effluent)			Chronic Toxicity (%Effluent)		
Trial	LC_{50} (95% CI)	NOEC	LOEC	EC_{25} (95% CI)	NOEC	LOEC
A	>100	100	>100	43 (32-70)	50	100
B	>100	100	>100	>100	100	>100
C[a]	-	-	-	-	-	-
D[c]	-	-	-	-	-	-
E[c]	-	-	-	-	-	-

[a] Inadequate survival in the control treatment group.
[c] Inadequate reproduction rate per female in controls.

Table 18. Average (n=10) Percent Mortality (Standard Error) of *Ceriodaphnia dubia.*

Trial	Control	6.25	12.5	25	50	100	Cold WET 100%
A	0 (0)	0 (0)	0 (0)	0 (0)	10 (6)	20 (8)	50 (16)*
B	10 (6)	10 (6)	10 (6)	0 (0)	0 (0)	0 (0)	0 (0)
C[a]	-	-	-	-	-	-	-
D[c]	-	-	-	-	-	-	-
E[c]	-	-	-	-	-	-	-

[a] Inadequate survival in the control treatment group.
[c] Inadequate reproduction rate per female in controls.
* Statistically significant ($p<0.05$)

Table 19. Average (n=10) Number of Young per Female (standard error) of *Ceriodaphnia dubia*.

Trial	Control	6.25	12.5	25	50	100	Cold WET 100%
A	21 (1.5)	22 (0.9)	21 (1.2)	23 (1.0)	15 (1.5)	12 (0.9)*	5 (1.4)*
B	21 (1.0)	18 (1.7)	17 (1.4)	23 (0.8)	24 (0.6)	17 (0.8)	20.9 (1.8)
C[a]	-	-	-	-	-	-	-
D[c]	-	-	-	-	-	-	-
E[c]	-	-	-	-	-	-	-

[a] Inadequate survival in the control treatment group.
[c] Inadequate reproduction rate per female in controls.
* Statistically significant when compared to control ($p<0.05$)

3.4.3. Disinfection By-Products (DBPs)

Levels of all analyzed compounds were below the method reporting limits (see table 20 for MRLs) in all control water samples collected during Test Trials A-E. During Test Trials A-E, the only measureable concentrations of DBPs found in the backwash samples were for several samples containing sodium chlorate ranging in concentration from 12 to 13 μg/L (table 20). Measureable levels of many of the THMs and HAAs were found in the treated water samples collected immediately post treatment and from samples collected after the five day retention time. Total THM concentrations were higher in the samples collected after the five-day retention time than found in the samples collected immediately post treatment in all cases. Total THM concentrations ranged from 101 to 192 μg/L in post-treatment sample water and 229 to 265 μg/L after five-day retention (table 20). Total HAAs ranged from 98 to 180 μg/L in post-treatment and treated discharge sample water and displayed no definite pattern with time (table 20). Dichloroacetonitrile was the only haloacetonitrile compound out of four that were analyzed that had measureable concentrations in any of the water samples collected. Dichloroacetonitrile was measured only in water samples collected immediately post treatment, and concentrations ranged from 2.9 to 4.1 μg/L (table 20), but this compound was below the method reporting limit in treated water after a five-day retention. Sodium chlorate concentrations in treated water collected immediately post treatment and on discharge, ranged from 370 to 450 μg/L (table 20). Sodium bromate was not detected in any of the samples collected during intake or discharge.

Table 20. Results from Analysis of Disinfection By-Products Measured in Samples Collected during Siemens SiCURE™ Performance Evaluations.
Note: Te method reporting limits (MRLs) for each class of chemicals is the summation of all the individual reporting limits for each chemical, and are as follows: trihalomethanes MRL = 2.0 µg/L, haloacetic acids MRL = 11.0 µg/L, dichloroacetonitrile MRL = 0.5 µg/L, and sodium chlorate MRL = 10.0 µg/L.

Parameter	Sample	Trial A	Trial B	Trial C	Trial D	Trial E
Trihalomethanes (µg/L)	Intake - Filter Backwash Line	<2.0	<2.0	<2.0	<2.0	<2.0
	Post-Treatment (Tub 6)	100.5	123.8	121.4	191.7	161.6
	Control Discharge (Tub 1)	<2.0	<2.0	<2.0	<2.0	<2.0
	Treatment Discharge (Tub 6)	229.4	260.8	264.7	233.6	264.2
Haloacetic Acids (µg/L)	Intake - Filter Backwash Line	<11.0	[b] <4.0	<11.0	<11.0	<11.0
	Post-Treatment (Tub 6)	127.2	[a] Not Measured	123.8	158.1	156.4
	Control Discharge (Tub 1)	<11.0	[a] Not Measured	<11.0	<11.0	<11.0
	Treatment Discharge (Tub 6)	180.4	101.5	97.8	117.2	104.1
Sodium chlorate (µg/L)	Intake - Filter Backwash Line	<10.0	<10.0	13	12	13
	Post-Treatment (Tub 6)	420	380	370	450	400
	Control Discharge (Tub 1)	<10.0	<10.0	<10.0	<10.0	<10.0
	Treatment Discharge (Tub 6)	420	380	380	440	410
Dichloroacetonitrile (µg/L)	Intake - Filter Backwash Line	<0.5	<0.5	<0.5	<0.5	<0.5
	Post-Treatment (Tub 6)	4.1	3.7	3.2	3.2	2.9
	Control Discharge (Tub 1)	<0.5	<0.5	<0.5	<0.5	<0.5
	Treatment Discharge (Tub 6)	<0.5	<0.5	<0.5	<0.5	<0.5

[a] Sample bottles broke in transit to the laboratory.
[b] Zeros (not MRL values) were reported for all haloacetic acids analyzed, with the exception of tribromoacetic acid for which the MRL of <4.0 µg/L was reported.

4.0. DISCUSSION OF RESULTS

The GSI tests on the SiCURE™ Ballast Water Management System were comprehensive and informative of the treatment system's potential performance relative to IMO G8 guidelines in fresh water systems like the Great Lakes. The SiCURE™ Ballast Water Management System operated without interruption during five consecutive valid trials, and biological performance outcomes were remarkably consistent across trials. Treated discharge water from these valid trials contained densities of organisms within the regulated size classes that were below the IMO D-2 standards, as determined using methods documented in this report. Though data on *V. cholera* concentration are still pending, other microbial analyses showed system performance in keeping with IMO requirements for bacteria. Chemistry data generated across trials indicated the post-retention discharge to have well less than 0.1 mg/L total residual chlorine under ambient conditions. Ambient water collected immediately after treatment and held in a cold environment had TRC and TRO levels which slightly exceeded this level. However, in a real world application, the intake water would also be cold, and developers claim that the test system is designed to respond to this circumstance (reflected in oxidation-reduction potential, or ORP) with a reduction in chlorine generated and injected into the intake stream.

Disinfection by-products were detectable in post-treatment and post-retention water. Little aquatic chronic toxicity data are available for the DBPs tested. A comparison to United States Federal Drinking Water Maximum Contaminant Levels (MCLs) show the total THM values in the treated water above the limits for total THMs (80 μg/L) and HAA (60 μg/L) in all of the treated water samples. However, this comparison is very conservative as it pertains to drinking water not subject to dilution effects.

There were two to five valid replicates of Standard and Cold WET assays for all organisms across trials. There were no statistically significant ($p<0.05$) acute toxic effects of treated discharge on any test species across assays and trials. There were no statistically significant ($p<0.05$) detectable chronic toxicity effects across organisms and trials in 50 percent or lower effluent dilutions. Chronic toxicity effects (reduced reproduction) in 100 percent effluent were detected in Trail A for test species of zooplankton and possibly phytoplankton in both the Standard and Cold WET assay, but not in other trials or dilution.

5.0. CONCLUSIONS

The Siemens SiCURE™ Ballast Water Management System functioned properly during five consecutive trials, and was highly effective at reducing live organism densities in the fresh water ambient conditions of Duluth-Superior Harbor, as amended in these tests to achieve IMO-consistent challenge conditions. Live organisms in the regulated size classes were discharged in densities below the IMO D-2 standard. Further data and testing are needed to fully characterize residual toxicity after a five day retention period, but we detected no consistent or pronounced effect in these trials.

REFERENCES

GSI (2009). Quality Assurance Project Plan for Great Ships Initiative (GSI) Bench-Scale and Land-Based Biological Tests (2009).

Hasan JA, Huq A, Tamplin ML, Siebeling RJ and Colwell RR (1994). A Novel Kit for Rapid Detection of *Vibrio cholerae* O1. Clinical Microbiology; 32(1): 249-252

International Maritime Organization (IMO), 2004. International Convention for the Control and Management of Ships Ballast Water and Sediments. As adopted by consensus at a Diplomatic Conference at IMO, London, England, February 13 2004.

U.S. EPA, Office of Water (2002). Short-term Methods for Estimating the Chronic Toxicity of Effluents and Receiving Waters to Freshwater Organisms, 4th Edition. Accessed from: http://www.epa.gov/waterscience/methods/wet/disk3/index.html.

APPENDICES

1. Design of the GSI Land-Based RDTE Facility
2. GSI SOPs Relevant to SiCURE™ Tests
3. Average Density of Live Zooplankton in Treatment Discharge
4. Data Quality Objectives, Criteria and Results
5. Operational Data Summary

APPENDIX 1.

GSI LAND-BASED RDTE FACILITY: TECHNICAL INFORMATION

The GSI's Land-Based Research, Development and Technology Evaluation (RDTE) Facility in Superior, Wisconsin is used to conduct full-scale biological evaluations of prospective ballast treatments suitable to Seaway-sized vessels. The facility draws raw intake water and entrained organisms from Duluth-Superior Harbor at up to 680 m^3/hr. After initial transport through 16 inch HDPE line to the facility, a carefully designed "Y-split" in the intake piping simultaneously channels one half of the flow (up to 340 m^3/hr) to a treatment track and one half (up to 340 m^3/hr) to a matched control track (figure 1). Water in the treatment track passes through the experimental ballast treatment system and into one of the 200 m^3 cylindrical treatment retention tanks (test tank #1 or #2; figure 1). Water in the control track by-passes the treatment system and is channeled directly into a matched control retention tank (control tank #1 or #2; figure 1). After storage (duration dependent on test requirements), the water is discharged sequentially from the treatment and control retention tanks at up to 340 m^3/hr. Depending on the test scenario, the water is either discharged to the harbor or transferred to an alternate retention tank for subsequent transport to a wastewater facility, or through the treatment system again for discharge or retention.

Treatment and control intake and discharge water is sampled at pressure/flow controlled in-line sample points (SPs). Intake samples are collected concurrently on the control and treatment tracks respectively (using SP#2 and SP#3, figure 2). Post-treatment samples are collected from SP#15 (figure 2). Discharge samples are collected from one of two discharge sample points (SP#9, or SP#10; figure 2), with sequential sampling of control and treatment water. At each of these SPs there are three replicate sample ports with a center-located 3.8 cm internal diameter (ID) elbow-shaped pitot tube (figure 3) connected to a 3.8 cm ID PVC transfer pipe that carries the sample water to one of six 3.8. m^3 collection tubs located at a centralized sampling station (figure 2). Injection Ports A and B (figure 1) can be used to meter fine grade Arizona Test Dust, and concentrated algae harvested from the Duluth-Superior Harbor into the intake stream to assure adequate concentrations of Total Suspended Solids (TSS) and live phytoplankton in intake and control discharge. Other SPs shown in figure 2, with one port per SP, are used for calibration testing the facility itself and not typically used for sample collection during a treatment system evaluation.

A mobile field laboratory and on-site stationary structure provides bench-scale facilities to support time-sensitive assays associated with tests conducted at the GSI Land-Based RDTE Facility. The mobile laboratory is located at the facility during testing but may be moved to other sites in the Great Lakes-St. Lawrence Seaway System to support GSI shipboard tests when required. Both laboratories are climate-controlled with enough desk and counter space to allow for simultaneous microscopic and analytical analysis of samples. In addition, laboratories of the University of Wisconsin-Superior's Lake Superior Research Institute (LSRI) and the University of Minnesota-Duluth's Natural Resources Research Institute provide non-time sensitive analysis of samples from the land-based tests. Since both facilities are only a few miles from the facility, samples can be easily transported for rapid analysis.

Figure 1. Simplified Schematic of the GSI Land-Based RDTE Facility.

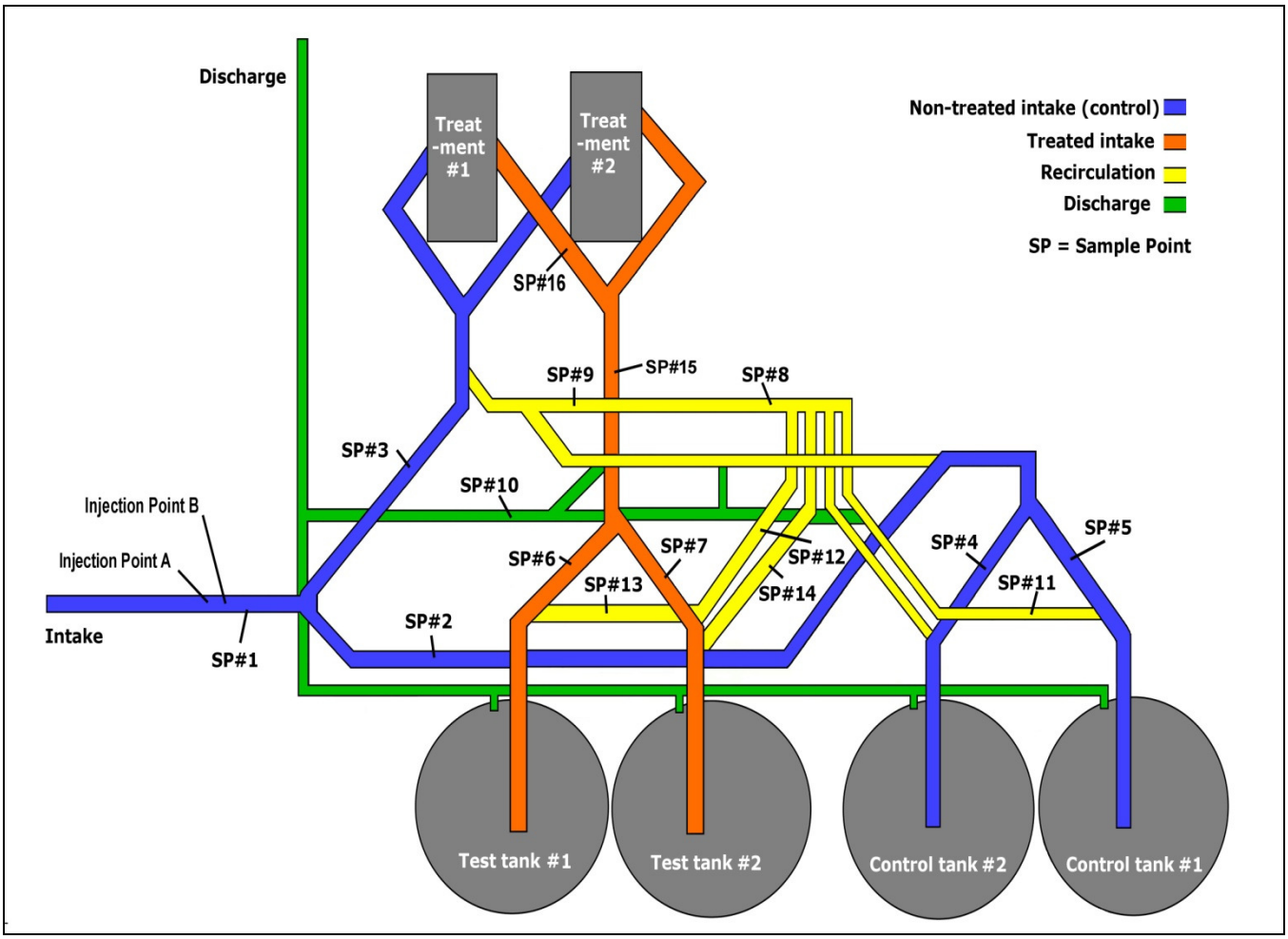

Figure 2. Schematic of the GSI Land-Based RDTE Facility Showing the Location of the Intake and Discharge Sample Points (i.e., SP #s 2, 3, 9, and 10), and Corresponding Sample Collection Tubs.

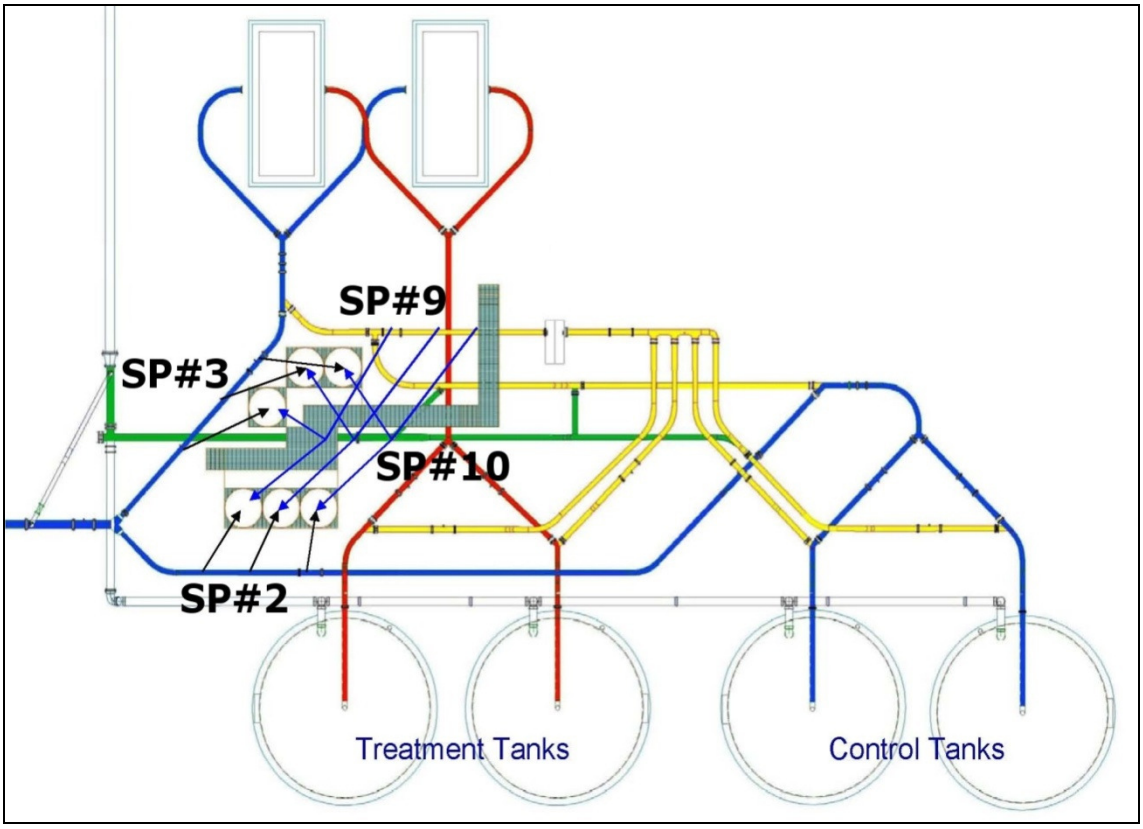

Figure 3. Schematic of a Sample Point (SP) Showing the Design of the Three Sample Port Pitots.

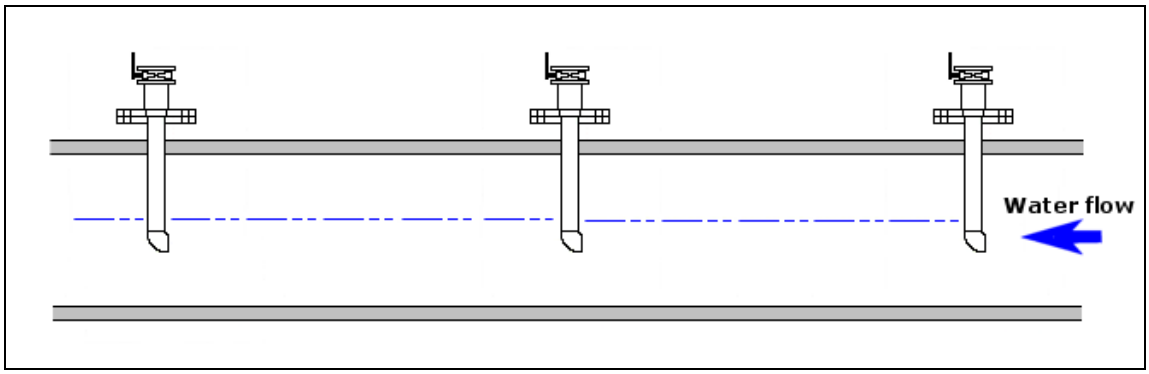

APPENDIX 2.

GSI SOPs Relevant to Siemens SiCURE™ Performance Evaluation

SOP/Analysis Category	SOP ID Code	SOP Title	Date of Issue
Health and Safety	GSI/SOP/LB/G/S/1	Procedure for Ensuring Worker Health and Safety at the GSI Land-Based RDTE Facility	June 26, 2009
Facility Operation	GSI/SOP/LB/G/O/1	Procedure for Operating the GSI Land-Based RDTE Facility	July 20, 2009
Facility Operation	GSI/SOP/LB/G/O/3	Procedure for Cleaning the Retention Tanks and Other Equipment at the GSI Land-Based RDTE Facility	July 20, 2009
Facility Operation	GSI/SOP/LB/G/O/5	Procedure for Injecting Organisms and Solids into the GSI Land-Based RDTE Facility	September 1, 2009
Facility Operation	GSI/SOP/LB/G/O/7	Procedure for Solids Resuspension After Retention at the GSI Land-Based RDTE Facility	DRAFT
Sample Handling and Custody	GSI/SOP/G/RA/SC/3	Procedure for Labeling Samples Collected at the GSI Land-Based RDTE Facility	July 15, 2009
Water Chemistry	GSI/SOP/BS/RA/C/2	Procedure for Determining Total Residual Oxidants (TRO) in Water	July 7, 2009
Water Chemistry	GSI/SOP/BS/RA/C/6	Procedure for Analyzing Total Residual Chlorine Concentrations in Water	July 15, 2009
Water Quality	GSI/SOP/BS/RA/C/3	Procedures for Measuring Organic Carbon in Aqueous Samples	May 28, 2009
Water Quality	GSI/SOP/BS/RA/C/8	Procedure for Analyzing Total Suspended Solids (TSS)	June 30, 2009
Sample Collection	GSI/SOP/LB/RA/SC/8	Procedure for Collecting Physical/Chemical Data and Samples at the GSI Land-Based RDTE Facility.	DRAFT
Sample Collection	GSI/SOP/LB/RA/SC/1	Procedure for Collecting Biological Sample Water via In-Line Sample Ports	July 20, 2009
Sample Collection	GSI/SOP/LB/RA/SC/6	Procedure for Zooplankton Sample Collection	July 20, 2009
Zooplankton Sample Analysis	GSI/SOP/LB/RA/SA/2	Procedure for Zooplankton Sample Analysis	July 20, 2009

Sample Collection	GSI/SOP/LB/RA/SC/3	Procedure for Algae/Small Protozoa Sample Collection	June 26, 2009
Phytoplankton Sample Analysis	GSI/SOP/LB/RA/SA/1	Procedure for Algae/Small Protozoan Sample Analysis	June 26, 2009
Sample Collection	GSI/SOP/LB/RA/SC/4	Procedure for Microbial Sample Collection	July 16, 2009
Microbial Sample Analysis	GSI/SOP/LB/RA/SA/3	Procedure for the Colony Blot Preparation for Enumeration of Culturable *Vibrio chloreae*	DRAFT
Microbial Sample Analysis	GSI/SOP/BS/RA/MA/1	Procedure For Quantifying Heterotrophic Plate Counts (HPCs) Using IDEXX's SimPlate® for HPC Method	July 17, 2009
Microbial Sample Analysis	GSI/SOP/BS/RA/MA/3	Procedure for the Detection and Enumeration of *Enterococcus* using Enterolert™	July 17, 2009
Microbial Sample Analysis	GSI/SOP/BS/RA/MA/4	Procedure for the Detection and Enumeration of Total Coliforms and *E. coli* Using IDEXX's Colilert®	July 17, 2009
Whole Effluent Toxicity Testing	GSI/SOP/BS/RA/WET/1	Procedure for Assessing Chronic Residual Toxicity of a Ballast Treatment System to *Ceriodaphia dubia*	July 16, 2009
Whole Effluent Toxicity Testing	GSI/SOP/BS/RA/WET/2	Procedure for Assessing Chronic Residual Toxicity of a Ballast Treatment System to the Fathead Minnow (*Pimephales promelas*)	July 16, 2009
Whole Effluent Toxicity Testing	GSI/SOP/BS/RA/WET/3	Procedure for Assessing Chronic Residual Toxicity of a Ballast Treatment System to the Green Alga (*Selenastrum capricornutum*)	DRAFT
Data Management	GSI/SOP/G/RA/DM/1	Procedure for Data Entry, Data Quality Control and Database Management	Available on request (Internal document)

APPENDIX 3.

Average Density (per m^3) of Live Zooplankton in Treatment Discharge during the Trials of the SiCURE™ System.

Test Trials:		Trial A	Trial B	Trial C	Trial D	Trial E
Total Vol. Treatment Discharge Analyzed, m^3:		**3.84**	**3.96**	**6.11**	**5.97**	**6.05**
Greater than 50 μm (min. dimension)						
Taxa Group	**Species**	**Avg. Density (per m^3)**	**Avg. Density (per m^3)**	**Avg. Density (per m^3)**	**Avg. Density (per m^3)**	**Avg. Density (per m^3)**
Arachnida	Mite					0.17
Cladocerans	Bosmina				0.17	
	Daphnia				0.17	
Copepods	Copepod	0.79			0.17	
Diptera	Chironomid	2.08	4.03	2.79	2.36	0.66
Nematoda	Nematode				0.33	
Ostracoda	Ostracod				0.17	
Dreissena	Dreissenid (Zebra Mussel)		0.50			
Nauplii	Copepod Nauplii	1.56	2.52	1.32	0.34	0.66
Tardigrade	Tardigrade		0.49			
Rotifers	Bdelloid	0.52		0.33		
	Keratella				0.33	
Greater than 50 μm (min. dimension) Total:		**4.95**	**7.54**	**4.44**	**4.04**	**1.49**
Less than 50 μm (min. dimension)						
Taxa Group	**Species**	**Avg. Density (per m^3)**	**Avg. Density (per m^3)**	**Avg. Density (per m^3)**	**Avg. Density (per m^3)**	**Avg. Density (per m^3)**
Rotifers	Lecanidae	5.21	12.57	7.52	3.02	0.99
Less than 50 μm (min. dimension) Total:		**5.21**	**12.57**	**7.52**	**3.02**	**0.99**

APPENDIX 4. DATA QUALITY OBJECTIVES, CRITERIA AND RESULTS

Table 1. Water Quality Analyses.

Data Quality Indicator	Evaluation Process/ Performance Measurement	Data Quality Objective	Performance Measurement Result	
Precision	Samples (10%) are collected and analyzed in duplicate – with performance measured by **average relative percent difference (RPD)** of all duplicate analyses performed during test trials.	<20% average (± SD) RPD.	*Percentage of Water Quality Samples Collected and Analyzed in Duplicate:* **17%**	***Total Suspended Solids:* 4.5% (±6.7%) RPD**, n=6
				***Dissolved Organic Carbon:* 2.4% (±1.8) RPD**, n=6
				***^Particulate Organic Carbon:* 111.4% (±100.6%) RPD**, n=6
Accuracy	Performance is measured by **average percent difference (%D)** between all measured and nominal reference standard values from test trials.	<20% average (± SD) D.	*Percentage of Analysis Days Containing a Reference Standard:* **100%**	***Total Suspended Solids:* 4.3% (±2.7%) D**, n=5
				***Dissolved Organic Carbon:* 1.0% (±1.0) D**, n=5
Representativeness	Pre-treatment/control and post-treatment/treatment samples are handled and analyzed in the same manner.	Not Applicable – Qualitative.	All pre-treatment and post-treatment water quality intake samples, as well as all control and treatment discharge samples, were collected, handled, and analyzed in the same manner (using the appropriate GSI SOPs).	
Comparability	Routine procedures are conducted according to appropriate SOPs to ensure consistency between tests.	Not Applicable – Qualitative.	The following GSI SOPs were used for all water quality analyses conducted during the test trials: **- GSI/SOP/BS/RA/C/3** – Procedures for Measuring Organic Carbon in Aqueous Samples **- GSI/SOP/BS/RA/C/8** – Procedure for Analyzing Total Suspended Solids (TSS)	
Completeness	Number of valid data obtained from the performance measurement system vs. number performance measurement samples analyzed. Performance is measured by percent completeness (%C).	>90% C.	***Total Suspended Solids:*** 10/10 performance measurements met DQO = **100% C**	
			Dissolved Organic Carbon: 10/10 performance measurements met DQO = **100% C**	
			^Particulate Organic Carbon: 2/5 performance measurements met DQO = **40% C**	

^Water quality parameter having performance measurement result that did not meet data quality objective specified in GSI QAPP (2009).

Table 2. Chemistry Analyses.

Data Quality Indicator	Evaluation Process/ Performance Measurement	Data Quality Objective	Performance Measurement Result	
Precision	Samples (10%) are collected and analyzed in duplicate – with performance measured by **average relative percent difference (RPD)** of all duplicate analyses performed during test trials.	<20% average (± SD) RPD.	*Percentage of Chemistry Samples Collected and Analyzed in Duplicate:* **20%**	***Total Residual Chlorine:*** **4.8% (±5.3%) RPD**, n=11
				Total Residual Oxidants: **8.2% (±7.0%) RPD**, n=11
Bias	**Performance is measured by average percent spike-recovery (%SPR) of all analyses performed during test trials.**	75%-110% average (± SD) SPR.	*Percentage of Chemistry Samples Collected, Spiked, and Analyzed:* **18% (TRC)** and **15% (TRO)**	***Total Residual Chlorine:*** **98.6% (±15.5%) RPD**, n=10
				Total Residual Oxidants: **95.7% (±3.8%) RPD**, n=8
Accuracy	Performance is measured by **average percent difference (%D)** between all measured and nominal reference standard values from test trials.	<20% average (± SD) D.	*Percentage of Analysis Days Containing a Reference Standard:* **100%**	***Total Residual Chlorine:*** **4.8% (±3.0%) D**, n=10
				Total Residual Oxidants: **7.2% (±1.1%) D**, n=10
Representativeness	Pre-treatment/control and post-treatment/treatment samples are handled and analyzed in the same manner.	Not Applicable – Qualitative.	All pre-treatment and post-treatment water quality intake samples, as well as all control and treatment discharge samples, were collected, handled, and analyzed in the same manner (using the appropriate GSI SOPs).	
Comparability	Routine procedures are conducted according to appropriate SOPs to ensure consistency between tests.	Not Applicable – Qualitative.	The following GSI SOPs were used for all water quality analyses conducted during the test trials: **-GSI/SOP/BS/RA/C/2 –** Procedure for Determining Total Residual Oxidants (TRO) in Water **-GSI/SOP/BS/RA/C/6 –** Procedure for Analyzing Total Residual Chlorine (TRC) Concentrations in Water	
Completeness	Number of valid data obtained from the performance measurement system vs. number performance measurements collected. Performance is measured by percent completeness (%C).	>90% C.	***Total Residual Chlorine:*** 29/31 performance measurements met DQO = **94% C**	
			Total Residual Oxidants: 28/29 performance measurements met DQO = **97% C**	
Sensitivity	The limit of detection (LOD) and quantification (LOQ) for the analytical method used is reported.	Dependent upon the analyte and instrumentation.	***Total Residual Chlorine:*** LOD = **3 µg/L**; LOQ = **8 µg/L**	
			Total Residual Oxidants: LOD = **8 µg/L**; LOQ= **27 µg/L**	

Table 3. Phytoplankton (Organisms <50 µm) Analyses.

Data Quality Indicator	Evaluation Process/ Performance Measurement	Data Quality Objective	Performance Measurement Result	
Bias	Samples (10%) are analyzed by two separate taxonomists – with performance measured by **average percent similarity (PS)** of taxonomic identification (live entities) and **average relative percent difference (RPD)** of the number of live entities counted for all second (QA) analyses performed during test trials.	>60% average (± SD) PS and <20% average (± SD) RPD.	*Percentage of Phytoplankton Samples Analyzed by a Second Taxonomist:* **35%**	**97.5% (± 2.1%) PS**, n=5 **3.30% (± 3.27) RPD**, n=5
Representativeness	Pre-treatment/control and post-treatment/treatment samples are handled and analyzed in the same manner.	Not Applicable – Qualitative.	All pre-treatment and post-treatment phytoplankton samples collected on intake, as well as all control and treatment discharge samples, were collected, handled, and analyzed in the same manner (using the appropriate GSI SOPs).	
Comparability	Routine procedures are conducted according to appropriate SOPs to ensure consistency between tests.	Not Applicable – Qualitative.	The following GSI SOP was used for all phytoplankton sample analyses conducted during the test trials: **- GSI/SOP/LB/RA/SA/1** – Procedure for Algae/Small Protozoan Sample Analysis	
Completeness	Number of valid data obtained from the performance measurement system vs. number performance measurement samples analyzed. Performance is measured by percent completeness (%C).	>90% C.	9/10 performance measurements met DQO = **90% C**	

Table 4. Zooplankton (Organisms >50 μm) Analyses.

Data Quality Indicator	Evaluation Process/ Performance Measurement	Data Quality Objective	Performance Measurement Result	
Bias	Samples (10%) are analyzed by two separate taxonomists – with performance measured by **average percent similarity (PS)** of taxonomic identification (live organisms only) and **average relative percent difference (RPD)** of the number of live organisms counted for all second (QA) analyses performed during test trials.	>90% average (± SD) PS and <20% average (± SD) RPD.	*Percentage of Zooplankton Samples Analyzed by a Second Taxonomist:* **16%**	**^Microzooplankton: 80.0% (± 9.4%) PS**, n=4 and **42.4% (± 32.2%) RPD,** n=4
				Macrozooplankton: 97.3% (± 2.5%) PS, n=5 and **4.0% (± 3.9%) RPD**, n=5
Representativeness	Pre-treatment/control and post-treatment/treatment samples are handled and analyzed in the same manner.	Not Applicable – Qualitative.	All pre-treatment and post-treatment zooplankton samples collected on intake, as well as all control and treatment discharge samples, were collected, handled, and analyzed in the same manner (using the appropriate GSI SOPs).	
Comparability	Routine procedures are conducted according to appropriate SOPs to ensure consistency between tests.	Not Applicable – Qualitative.	The following GSI SOP was used for all zooplankton sample analyses conducted during the test trials: **- GSI/SOP/LB/RA/SA/2 (DRAFT)** – Procedure for Zooplankton Sample Analysis	
Completeness	Number of valid data obtained from the performance measurement system vs. number performance measurement samples analyzed. Performance is measured by percent completeness (%C).	>90% C.	**^Microzooplankton:** 2/8 performance measurements met DQO = **25% C**	
			Macrozooplankton: 9/10 performance measurements met DQO = **90% C**	

^Zooplankton analysis parameter having performance measurement result that did not meet data quality objective specified in GSI QAPP (2009).

Table 5. **Microbial Analyses.**

Data Quality Indicator	Evaluation Process/ Performance Measurement	Data Quality Objective	Performance Measurement Result	
Precision	Samples (10%) are analyzed in duplicate – with performance measured by **average relative percent difference (RPD)** of all duplicate analyses performed during test trials.	<20% average (± SEM) RPD.	*Percentage of Microbial Samples Analyzed in Duplicate:* ***20%***	***^E. coli:* 23.25% (±9.31%) RPD**, n=12
				^Total Coliforms: 36.36% (±14.99) RPD, n=12
				***^Enterococcus spp*.: 26.96% (±10.27%) RPD**, n=10
				^Heterotrophic: 53.93% (±24.96%) RPD, n=10
				***^Vibrio spp*.: 31.08% (±8.41%) RPD**, n=16
Bias	Samples (10%) are counted by two separate analysts – with performance measured by average relative percent difference (RPD) for all second counts performed during test trials.	<20% average (± SEM) RPD.	*Percentage of Microbial Samples Counted by a Second Analyst:* **40%** (Total Coliforms); **30%** (*E. coli*, *Enterococcus spp*., and Heterotrophic Bacteria); and **10%** (*Vibrio spp.)*	***E. coli:* 0.00% (±0.00%) RPD**, n=24
				Total Coliforms: 4.17% (±4.17) RPD, n=32
				***Enterococcus spp*.: 13.02% (±12.65%) RPD**, n=24
				Heterotrophic: 0.84% (±0.58%) RPD, n=24
				***^Vibrio spp*.: 43.06% RPD**, n=15
Representativeness	Pre-treatment/Control and post-treatment/treatment samples are handled and analyzed in the same manner.	Not Applicable – Qualitative.	All pre-treatment and post-treatment water quality intake samples, as well as all control and treatment discharge samples, were collected, handled, and analyzed in the same manner (using the appropriate GSI SOPs).	
Comparability	Routine procedures are conducted according to appropriate SOPs to ensure consistency between tests.	Not Applicable – Qualitative.	The following GSI SOPs were used for all microbial analyses conducted during the test trials: **-GSI/SOP/BS/RA/MA/1 –** Procedure for Quantifying Heterotrophic Plate Counts (HPCs) using IDEXX's SimPlate® for HPC Method **-GSI/SOP/BS/RA/MA/3 –** Procedure for the Detection and Enumeration of *Enterococcus* using Enterolert® **-GSI/SOP/BS/RA/MA/4 –** Procedure for the Detection and Enumeration of Total Coliforms and *E. coli* using IDEXX's Colilert® **-GSI/SOP/RDTE/SA/M/3–** Procedure for Colony Blot Preparation for the Enumeration of Culturable *Vibrio cholerae*	
Completeness	Number of valid data obtained from the performance measurement system vs. number of performance measurements collected. Performance is measured by percent completeness (%C).	>90% C.	***^E. coli*:** 31/36 performance measurements met DQO = **86% C**	
			^Total Coliforms: 36/44 performance measurements met DQO = **82% C**	
			***^Enterococcus spp*.:** 27/34 performance measurements met DQO = **79% C**	
			^Heterotrophic: 27/34 performance measurements met DQO = **79% C**	
			***^Vibrio spp*.:** 15/31 performance measurements met DQO = **48% C**	
Sensitivity	The limit of detection (LOD) for the analytical method used is reported.	Dependent upon the analytical technique used.	***E. coli* LOD:** <1 MPN/100 mL	
			Total Coliforms LOD: <1 MPN/100 mL	
			***Enterococcus spp*. LOD:** <1 MPN/100 mL	
			Heterotrophic LOD: <2 MPN/1 mL	
			***Vibrio spp*. LOD:** 0 CFU/100 mL	

^Microbial analysis having performance measurement result that did not meet data quality objective specified in GSI QAPP (2009).

Table 6. Whole Effluent Toxicity (WET) Tests.

Data Quality Indicator	Evaluation Process/ Performance Measurement	Data Quality Objective	Performance Measurement Result	
Bias	**Experiment Bias:** Monthly reference toxicant tests are conducted on test organisms. Performance is measured by **sensitivity of the test organisms relative to historical values**.	LC_{50} value within 2 standard deviations of the historical LC_{50} average	***C. dubia***: LC_{50} values from reference toxicant tests performed during WET Testing were within 2 SD of the historical average (501.5 and 498.4 mg/L KCl), n=2.	
			P. promelas: LC_{50} value from reference toxicant test performed 9/2009 was within 2 SD of the historical average (6.45 g/L NaCl), n=1.	
			S. capricornutum: No data, reference toxicant test not conducted on this test organism.	
	Operator Bias: Experimental units (10%) are counted by two separate analysts – with performance measured by **average relative percent difference (RPD)** of the number of live test organisms counted for all second analyses.	<10% average RPD (±SD)	***C. dubia:*** **39%** of experimental units counted by a second analyst	***C. dubia:*** **0.1% (± 0.23%) RPD**, n=1055
			P. promelas: **35%** of experimental units counted by a second analyst	***P. promelas:*** **0.1% (± 0.1%) RPD**, n=442
			S. capricornutum: **0%** of experimental units counted by a second analyst.	***S. capricornutum:*** No data, RPD could not be determined
Representativeness	Control groups (reference and dilution control) and treatment groups are handled and analyzed in the same manner.	Not Applicable – Qualitative.	All control groups (reference and dilution controls) and all treatment groups were set up, handled, and analyzed in the same manner (using the appropriate GSI SOPs).	
Comparability	Routine procedures are conducted according to appropriate SOPs to ensure consistency between tests.	Not Applicable – Qualitative.	The following GSI SOPs were used for all WET Testing conducted during the test trials: **-GSI/SOP/BS/RA/WET/1** – Procedure for Assessing Chronic Residual Toxicity of a Ballast Treatment System to *Ceriodaphnia dubia* **-GSI/SOP/BS/RA/WET/2** – Procedure for Assessing Chronic Residual Toxicity of a Ballast Treatment System to the Fathead Minnow (*Pimephales promelas*) **-GSI/SOP/BS/RA/WET/3 (DRAFT)** – Procedure for Assessing Chronic Residual Toxicity of a Ballast Treatment System to the Green Alga (*Selenastrum capricornutum*)	
Completeness	Number of valid data obtained from the performance measurement system vs. number of performance measurements collected. Performance is measured by percent completeness (%C).	>90% C.	***Ceriodaphnia dubia:*** 1075/1075 performance measurements met DQO = **100% C**	
			Pimephales promelas: 443/443 performance measurements met DQO = **100% C**	
			Selenastrum capricornutum: No data, %C could not be determined.	

APPENDIX 5. OPERATIONAL DATA SUMMARY

					Trial A	Trial B	Trial C	Trial D	Trial E
Main System	Fill	Total Volume	Control Retention Tank	m^3	192	192	193	193	193
			Treatment Retention Tank	m^3	193	193	193	193	192
		Avg Flow	Control Track	m^3/hr	199	200	199	199	200
			Treatment Track	m^3/hr	199	198	199	199	198
		Avg System Pressure	Both Tracks	kPa	132	130	132	129	130
	Discharge	Total Volume	Control Retention Tank	m^3	180	181	181	181	182
			Treatment Retention Tank	m^3	182	179	184	179	182
		Avg Flow	Control Track	m^3/hr	200	196	196	199	199
			Treatment Track	m^3/hr	200	198	197	199	199
		Avg System Pressure	Control Track	kPa	135	130	128	125	123
			Treatment Track	kPa	125	124	128	127	130

Avg Values Calculated from the point of the by-pass valve shut until the pump is off.

					Trial A	Trial B	Trial C	Trial D	Trial E
Sampling System	Fill	Control	Sample Tub 1	m^3	2.09	2.09	2.09	2.08	2.09
			Sample Tub 2	m^3	2.08	2.08	2.08	2.07	2.08
		Treatment	Sample Tub 4	m^3	2.11	2.09	2.09	2.08	2.11
			Sample Tub 5	m^3	2.11	2.09	2.09	2.08	2.11
		Post Treatment	Sample Tub 6	m^3	2.09	2.09	2.08	2.07	2.09
	Drain	Control	Sample Tub 1	m^3	3.78	2.07	2.06	2.04	2.05
			Sample Tub 2	m^3	3.77	2.07	2.06	2.03	2.03
			Sample Tub 3	m^3		2.07	2.06	2.03	2.04
		Treatment	Sample Tub 4	m^3	3.88	2.02	2.06	2.02	2.04
			Sample Tub 5	m^3	3.87	2.02	2.06	2.01	2.04
			Sample Tub 6	m^3		2.01	2.06	2.01	2.04

Avg Values calculated from the measurable start of flow to the end of measurable flow